TY Semicondutor®

Product specification

2SK3794

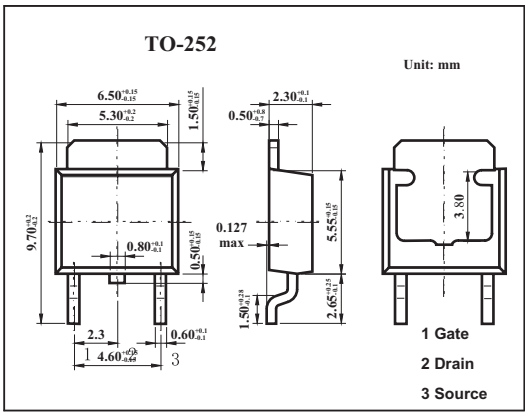

■ Features

- Low On-state resistance

  $R_{DS(on)1}$ = 44 mΩ MAX. (V_{GS} = 10 V, I_D = 10 A)

  $R_{DS(on)2}$ = 78 mΩ MAX. (V_{GS} = 4.0 V, I_D = 10 A)
- Low C_{iss}: C_{iss} = 760 pF TYP.
- Built-in gate protection diode

■ Absolute Maximum Ratings Ta = 25℃

Parameter	Symbol	Rating	Unit
Drain to source voltage	V_{DSS}	60	V
Gate to source voltage	V_{GSS}	±20	V
Drain current	I_D	±20	A
	I_{dp} *	±50	A
Power dissipation T_A=25℃ T_C=25℃	P_D	1.5 30	W
Channel temperature	T_{ch}	150	℃
Storage temperature	T_{stg}	-55 to +150	℃

* PW≤10μs,Duty Cycle≤1%

■ Electrical Characteristics Ta = 25℃

Parameter	Symbol	Testconditons	Min	Typ	Max	Unit
Drain cut-off current	I_{DSS}	V_{DS}=60V,V_{GS}=0			10	μA
Gate leakage current	I_{GSS}	V_{GS}=±20V,V_{DS}=0			±10	μA
Gate cut off voltage	$V_{GS(off)}$	V_{DS}=10V,I_D=1mA	2.5	3.5	4.5	V
Forward transfer admittance	| Y_{fs} |	V_{DS}=10V,I_D=10A	7.0	15		S
Drain to source on-state resistance	$R_{DS(on)1}$	V_{GS}=10V,I_D=10A		35	44	mΩ
	$R_{DS(on)2}$	V_{GS}=4.0V,I_D=10A		54	78	mΩ
Input capacitance	C_{iss}	V_{DS}=10V,V_{GS}=0,f=1MHZ		760		pF
Output capacitance	C_{oss}			150		pF
Reverse transfer capacitance	C_{rss}			71		pF
Turn-on delay time	t_{on}	I_D=10A,$V_{GS(on)}$=10V,R_G=0Ω,V_{DD}=30V		13		ns
Rise time	t_r			170		ns
Turn-off delay time	t_{off}			43		ns
Fall time	t_f			34		ns
Total Gate Charge	Q_G	V_{DD} = 48V V_{GS} = 10 V I_D =10A		17		nC
Gate to Source Charge	Q_{GS}			3.0		nC
Gate to Drain Charge	Q_{GD}			4.7		nC