MOS Field Effect Transistor
2SK3814

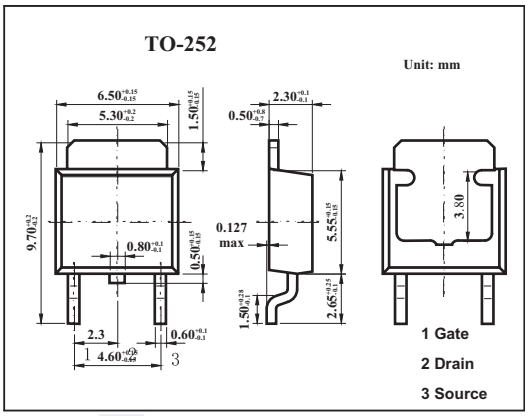

■ Features

- Low On-state resistance

  $R_{DS(on)1}$ = 8.7mΩ MAX. (V_{GS} = 10 V, I_D = 30 A)

  $R_{DS(on)2}$ = 10.5 mΩ MAX. (V_{GS} = 4.5 V, I_D = 30 A)
- Low C iss: C iss = 5450 pF TYP.

■ Absolute Maximum Ratings Ta = 25℃

Parameter	Symbol	Rating	Unit
Drain to source voltage	V_{DSS}	60	V
Gate to source voltage	V_{GSS}	±20	V
Drain current	I_D	±60	A
	I_{dp} *	±240	A
Power dissipation T_A=25℃ T_C=25℃	P_D	1.0 84	W
Channel temperature	T_{ch}	150	℃
Storage temperature	T_{stg}	-55 to +150	℃

* PW≤10μs,Duty Cycle≤1%

■ Electrical Characteristics Ta = 25℃

Parameter	Symbol	Testconditons	Min	Typ	Max	Unit
Drain cut-off current	I_{DSS}	V_{DS}=60V,V_{GS}=0			10	μA
Gate leakage current	I_{GSS}	V_{GS}=±20V,V_{DS}=0			±100	nA
Gate cut off voltage	$V_{GS(off)}$	V_{DS}=10V,I_D=1mA	1.5	2.0	2.5	V
Forward transfer admittance	$\lvert Y_{fs} \rvert$	V_{DS}=10V,I_D=30A	21	44		S
Drain to source on-state resistance	$R_{DS(on)1}$	V_{GS}=10V,I_D=30A		7.0	8.7	mΩ
	$R_{DS(on)2}$	V_{GS}=4.5V,I_D=30A		7.9	10.5	mΩ
Input capacitance	C_{iss}	V_{DS}=10V,V_{GS}=0,f=1MHZ		5450		pF
Output capacitance	C_{oss}			550		pF
Reverse transfer capacitance	C_{rss}			350		pF
Turn-on delay time	t_{on}	I_D=30A,$V_{GS(on)}$=10V,R_G=0Ω,V_{DD}=30V		23		ns
Rise time	t_r			8.5		ns
Turn-off delay time	t_{off}			85		ns
Fall time	t_f			7.7		ns
Total Gate Charge	Q_G	V_{DD} = 48V V_{GS} = 10 V I_D =60A		95		nC
Gate to Source Charge	Q_{GS}			17		nC
Gate to Drain Charge	Q_{GD}			26		nC