Programmable Gain Instrumentation Amplifier

AD625

FEATURES

User Programmed Gains of 1 to 10,000
Low Gain Error: 0.02% Max
Low Gain TC: 5 ppm/°C Max
Low Nonlinearity: 0.001% Max
Low Offset Voltage: 25 μV
Low Noise 4 nV/√Hz (at 1 kHz) RTI
Gain Bandwidth Product: 25 MHz
16-Lead Ceramic or Plastic DIP Package, 20-Terminal LCC Package
Standard Military Drawing Available
MIL-Standard Parts Available
Low Cost

FUNCTIONAL BLOCK DIAGRAM

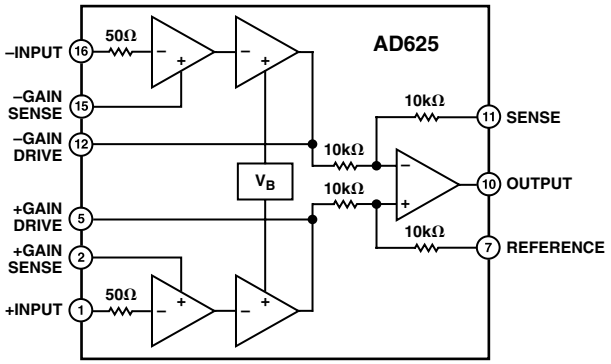

PRODUCT DESCRIPTION

The AD625 is a precision instrumentation amplifier specifically designed to fulfill two major areas of application: 1) Circuits requiring nonstandard gains (i.e., gains not easily achievable with devices such as the AD524 and AD624). 2) Circuits requiring a low cost, precision software programmable gain amplifier.

For low noise, high CMRR, and low drift the AD625JN is the most cost effective instrumentation amplifier solution available. An additional three resistors allow the user to set any gain from 1 to 10,000. The error contribution of the AD625JN is less than 0.05% gain error and under 5 ppm/°C gain TC; performance limitations are primarily determined by the external resistors. Common-mode rejection is independent of the feedback resistor matching.

A software programmable gain amplifier (SPGA) can be configured with the addition of a CMOS multiplexer (or other switch network), and a suitable resistor network. Because the ON resistance of the switches is removed from the signal path, an AD625 based SPGA will deliver 12-bit precision, and can be programmed for any set of gains between 1 and 10,000, with completely user selected gain steps.

For the highest precision the AD625C offers an input offset voltage drift of less than 0.25 μV/°C, output offset drift below 15 μV/°C, and a maximum nonlinearity of 0.001% at G = 1. All grades exhibit excellent ac performance; a 25 MHz gain bandwidth product, 5 V/μs slew rate and 15 μs settling time.

The AD625 is available in three accuracy grades (A, B, C) for industrial (–40°C to +85°C) temperature range, two grades (J, K) for commercial (0°C to +70°C) temperature range, and one (S) grade rated over the extended (–55°C to +125°C) temperature range.

PRODUCT HIGHLIGHTS

1. The AD625 affords up to 16-bit precision for user selected fixed gains from 1 to 10,000. Any gain in this range can be programmed by 3 external resistors.
2. A 12-bit software programmable gain amplifier can be configured using the AD625, a CMOS multiplexer and a resistor network. Unlike previous instrumentation amplifier designs, the ON resistance of a CMOS switch does not affect the gain accuracy.
3. The gain accuracy and gain temperature coefficient of the amplifier circuit are primarily dependent on the user selected external resistors.
4. The AD625 provides totally independent input and output offset nulling terminals for high precision applications. This minimizes the effects of offset voltage in gain-ranging applications.
5. The proprietary design of the AD625 provides input voltage noise of 4 nV/√Hz at 1 kHz.
6. External resistor matching is not required to maintain high common-mode rejection.

REV. D

Information furnished by Analog Devices is believed to be accurate and reliable. However, no responsibility is assumed by Analog Devices for its use, nor for any infringements of patents or other rights of third parties which may result from its use. No license is granted by implication or otherwise under any patent or patent rights of Analog Devices.

One Technology Way, P.O. Box 9106, Norwood, MA 02062-9106, U.S.A.
Tel: 781/329-4700 World Wide Web Site: http://www.analog.com
Fax: 781/326-8703
© Analog Devices, Inc., 2000

AD625—SPECIFICATIONS (typical @ V_S = ±15 V, R_L = 2 kΩ and T_A = + 25°C, unless otherwise noted)

Model	AD625A/J/S Min	AD625A/J/S Typ	AD625A/J/S Max	AD625B/K Min	AD625B/K Typ	AD625B/K Max	AD625C Min	AD625C Typ	AD625C Max	Unit
GAIN										
Gain Equation		$\frac{2R_F}{R_G}+1$			$\frac{2R_F}{R_G}+1$			$\frac{2R_F}{R_G}+1$		
Gain Range	1		10,000	1		10,000	1		110,000	
Gain Error[1]		±.035	**±0.05**		±0.02	**±0.03**		±0.01	**±0.02**	%
Nonlinearity, Gain = 1-256			±0.005			±0.002			±0.001	%
Gain>256			±0.01			±0.008			±0.005	%
Gain vs. Temp. Gain<1000[1]			5			5			5	ppm/°C
GAIN SENSE INPUT										
Gain Sense Current		300	**500**		150	**250**		50	**100**	nA
vs. Temperature		5	20		2	15		2	10	nA/°C
Gain Sense Offset Current		150	**500**		75	**250**		50	**100**	nA
vs. Temperature		2	15		1	10		2	10	nA/°C
VOLTAGE OFFSET (May be Nulled)										
Input Offset Voltage		50	**200**		25	**50**		10	**25**	µV
vs. Temperature		1	2/**2**		0.25	**0.50/1**		0.1	**0.25**	µV/°C
Output Offset Voltage		4	**5**		2	**3**		1	**2**	mV
vs. Temperature		20	50/**50**		10	25/**40**		10	**15**	µV/°C
Offset Referred to the Input vs. Supply										
G = 1	**70**	75		**75**	85		**80**	90		dB
G = 10	85	95		90	100		95	105		dB
G = 100	95	100		105	110		110	120		dB
G = 1000	**100**	110		**110**	120		**115**	140		dB
INPUT CURRENT										
Input Bias Current		±30	**±50**		±20	**±25**		±10	**±15**	nA
vs. Temperature		±50			±50			±50		pA/°C
Input Offset Current		±2	**±35**		±1	**±15**		±1	**±5**	nA
vs. Temperature		±20			±20			±20		pA/°C
INPUT										
Input Impedance										
Differential Resistance		1			1			1		GΩ
Differential Capacitance		4			4			4		pF
Common-Mode Resistance		1			1			1		GΩ
Common-Mode Capacitance		4			4			4		pF
Input Voltage Range										
Differ. Input Linear (V_{DL})[2]			±10			±10			±10	V
Common-Mode Linear (V_{CM})		$12\,V-\left(\frac{G}{2}\times V_D\right)$			$12\,V-\left(\frac{G}{2}\times V_D\right)$			$12\,V-\left(\frac{G}{2}\times V_D\right)$		
Common-Mode Rejection Ratio dc to 60 Hz with 1 kΩ Source Imbalance										
G = 1	**70**	75		**75**	85		**80**	90		dB
G = 10	90	95		90	105		100	115		dB
G = 100	100	105		105	115		110	125		dB
G = 1000	**110**	115		**110**	125		**120**	140		dB
OUTPUT RATING		±10 V @ 5 mA			±10 V @ 5 mA			±10 V @ 5 mA		
DYNAMIC RESPONSE										
Small Signal –3 dB										
G = 1 (R_F = 20 kΩ)		650			650			650		kHz
G = 10		400			400			400		kHz
G = 100		150			150			150		kHz
G = 1000		25			25			25		kHz
Slew Rate		5.0			5.0			5.0		V/µs
Settling Time to 0.01%, 20 V Step										
G = 1 to 200		15			15			15		µs
G = 500		35			35			35		µs
G = 1000		75			75			75		µs

Model	AD625A/J/S Min	AD625A/J/S Typ	AD625A/J/S Max	AD625B/K Min	AD625B/K Typ	AD625B/K Max	AD625C Min	AD625C Typ	AD625C Max	Unit
NOISE										
Voltage Noise, 1 kHz										
R.T.I.		4			4			4		nV/√Hz
R.T.O.		75			75			75		nV/√Hz
R.T.I., 0.1 Hz to 10 Hz										
G = 1		10			10			10		µV p-p
G = 10		1.0			1.0			1.0		µV p-p
G = 100		0.3			0.3			0.3		µV p-p
G = 1000		0.2			0.2			0.2		µV p-p
Current Noise										
0.1 Hz to 10 Hz		60			60			60		pA p-p
SENSE INPUT										
R_{IN}		10			10			10		kΩ
I_{IN}		30			30			30		µA
Voltage Range	±10			±10			±10			V
Gain to Output		1 ± 0.01			1 ± 0.01			1 ± 0.01		%
REFERENCE INPUT										
R_{IN}		20			20			20		kΩ
I_{IN}		30			30			30		µA
Voltage Range	±10			±10			±10			V
Gain to Output		1 ± 0.01			1 ± 0.01			1 ± 0.01		%
TEMPERATURE RANGE										
Specified Performance										
J/K Grades	0		+70	0		+70				°C
A/B/C Grades	–40		+85	–40		+85	–40		+85	°C
S Grade	–55		+125							°C
Storage	–65		+150	–65		+150	–65		+150	°C
POWER SUPPLY										
Power Supply Range		±6 to ±18			±6 to ±18			±6 to ±18		V
Quiescent Current		3.5	5		3.5	5		3.5	5	mA

NOTES

[1]Gain Error and Gain TC are for the AD625 only. Resistor Network errors will add to the specified errors.

[2]V_{DL} is the maximum differential input voltage at G = 1 for specified nonlinearity. V_{DL} at other gains = 10 V/G. V_D = actual differential input voltage. Example: G = 10, V_D = 0.50; V_{CM} = 12 V – (10/2 × 0.50 V) = 9.5 V.

Specifications subject to change without notice.

All min and max specifications are guaranteed. Specifications shown in **boldface** are tested on all production units at final electrical test. Results from those tests are used to calculate outgoing quality levels.

ABSOLUTE MAXIMUM RATINGS*

Supply Voltage . . . . . ±18 V
Internal Power Dissipation . . . . . 450 mW
Input Voltage . . . . . $\pm V_S$
Differential Input Voltage . . . . . $\pm V_S$
Output Short Circuit Duration . . . . . Indefinite
Storage Temperature Range (D, E) . . . . . –65°C to +150°C
Storage Temperature Range (N) . . . . . –65°C to +125°C
Operating Temperature Range
AD625J/K . . . . . 0°C to +70°C
AD625A/B/C . . . . . –40°C to +85°C
AD625S . . . . . –55°C to +125°C
Lead Temperature Range (Soldering 10 sec) . . . . . +300°C

*Stresses above those listed under Absolute Maximum Ratings may cause permanent damage to the device. This is a stress rating only; functional operation of the device at these or any other conditions above those indicated in the operational section of this specification is not implied. Exposure to absolute maximum rating conditions for extended periods may affect device reliability.

ORDERING GUIDE

Model	Temperature Range	Package Description	Package Option
AD625AD	–40°C to +85°C	16-Lead Ceramic DIP	D-16
AD625BD	–40°C to +85°C	16-Lead Ceramic DIP	D-16
AD625BD/+	–40°C to +85°C	16-Lead Ceramic DIP	D-16
AD625CD	–40°C to +85°C	16-Lead Ceramic DIP	D-16
AD625SD	–55°C to +125°C	16-Lead Ceramic DIP	D-16
AD625SD/883B	–55°C to +125°C	16-Lead Ceramic DIP	D-16
AD625SE/883B	–55°C to +125°C	20-Terminal Leadless Chip Carrier	E-20A
AD625JN	0°C to +70°C	16-Lead Plastic DIP	N-16
AD625KN	0°C to +70°C	16-Lead Plastic DIP	N-16
AD625ACHIPS	–40°C to +85°C	Die	
AD625SCHIPS	–55°C to +125°C	Die	
5962-87719012A*	–55°C to +125°C	20-Terminal Leadless Chip Carrier	E-20A
5962-8771901EA*	–55°C to +125°C	16-Lead Ceramic DIP	D-16

*Standard Military Drawing Available

CAUTION

ESD (electrostatic discharge) sensitive device. Electrostatic charges as high as 4000 V readily accumulate on the human body and test equipment and can discharge without detection. Although the AD625 features proprietary ESD protection circuitry, permanent damage may occur on devices subjected to high-energy electrostatic discharges. Therefore, proper ESD precautions are recommended to avoid performance degradation or loss of functionality.

PIN CONNECTIONS

Ceramic DIP (D) and Plastic DIP (N) Packages

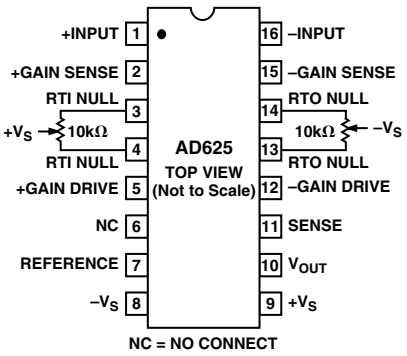

Leadless Chip Carrier (E) Package

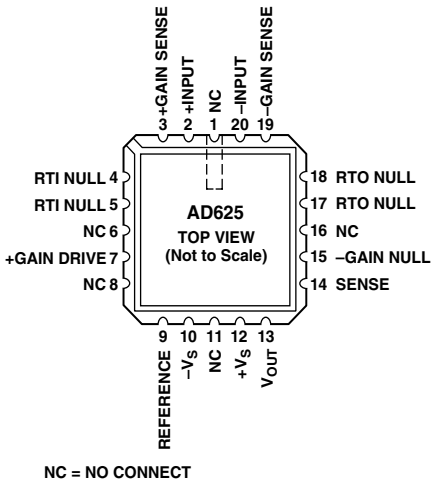

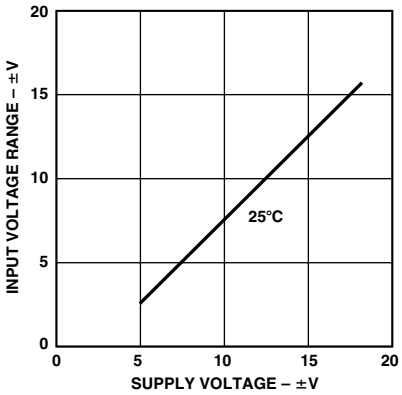

Figure 1. Input Voltage Range vs. Supply Voltage, G = 1

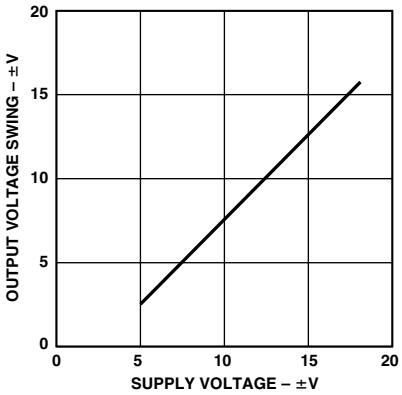

Figure 2. Output Voltage Swing vs. Supply Voltage

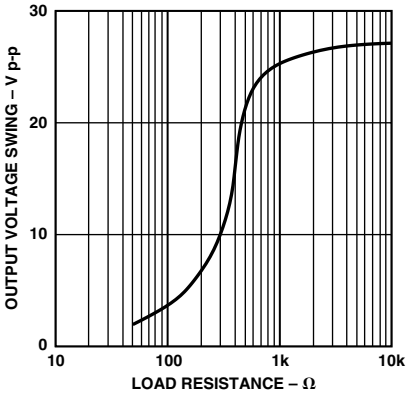

Figure 3. Output Voltage Swing vs. Load Resistance

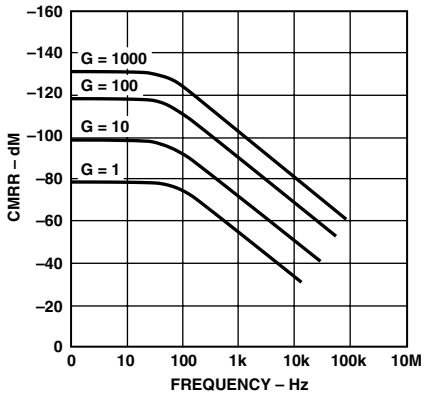

Figure 4. CMRR vs. Frequency RTI, Zero to 1 kΩ Source Imbalance

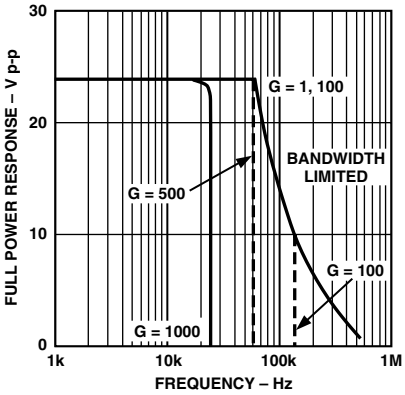

Figure 5. Large Signal Frequency Response

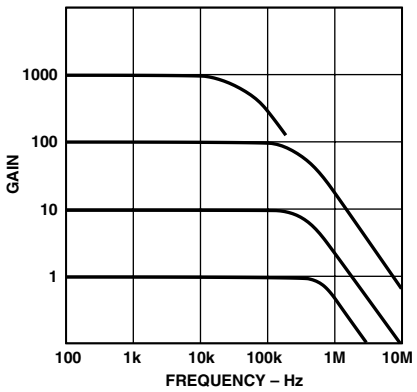

Figure 6. Gain vs. Frequency

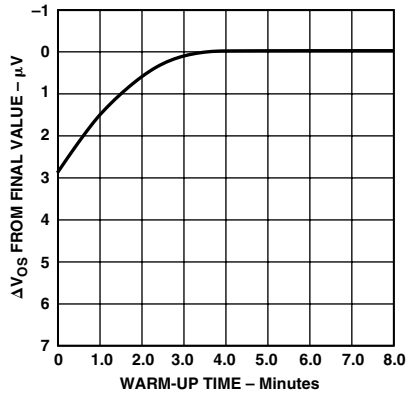

Figure 7. Offset Voltage, RTI, Turn On Drift

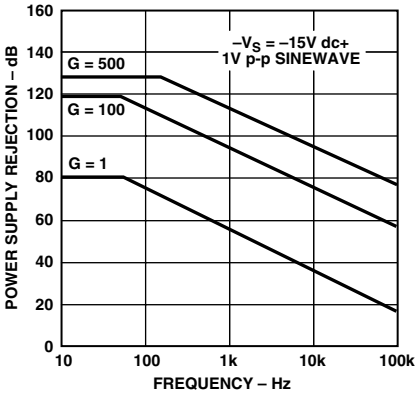

Figure 8. Negative PSRR vs. Frequency

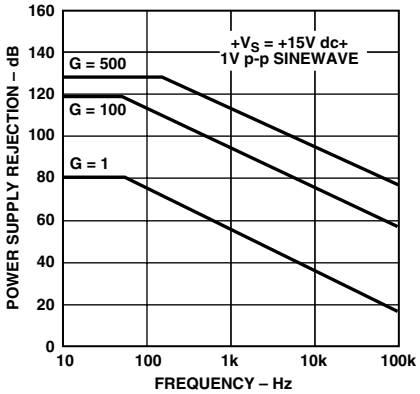

Figure 9. Positive PSRR vs. Frequency

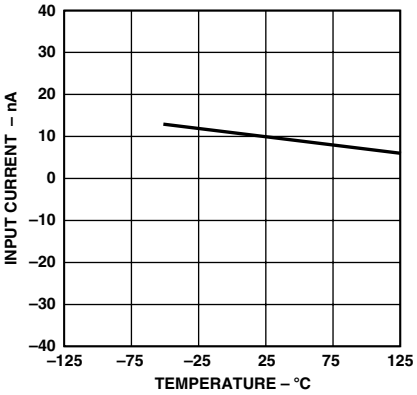

Figure 10. Input Bias Current vs. Temperature

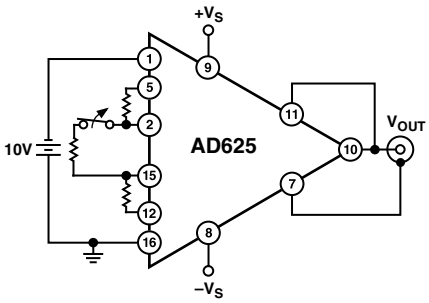

Figure 11. Overrange and Gain Switching Test Circuit (G = 8, G = 1)

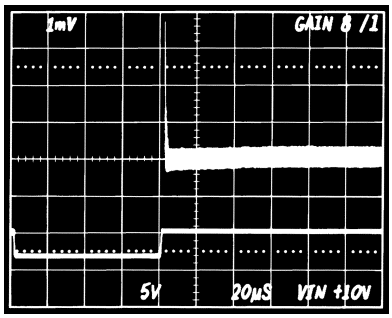

Figure 12. Gain Overrange Recovery

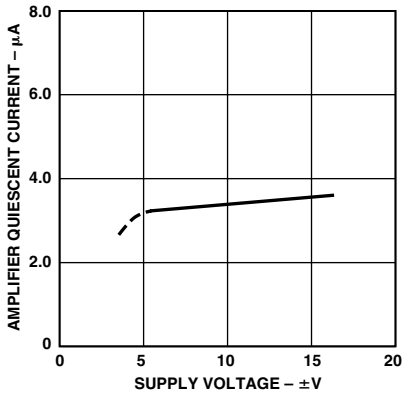

Figure 13. Quiescent Current vs. Supply Voltage

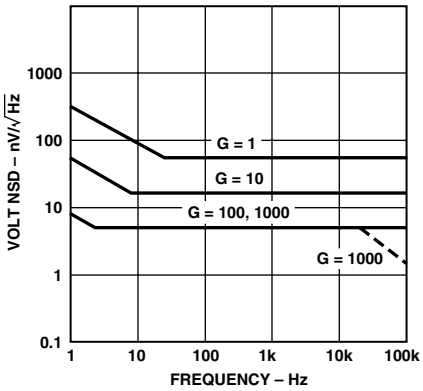

Figure 14. RTI Noise Spectral Density vs. Gain

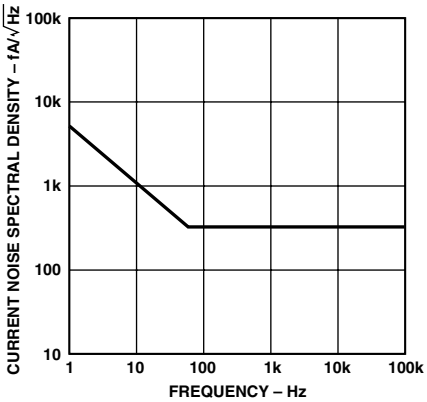

Figure 15. Input Current Noise

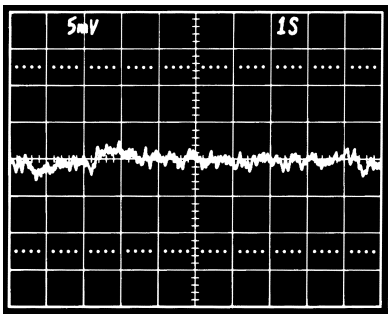

Figure 16. Low Frequency Voltage Noise, G = 1 (System Gain = 1000)

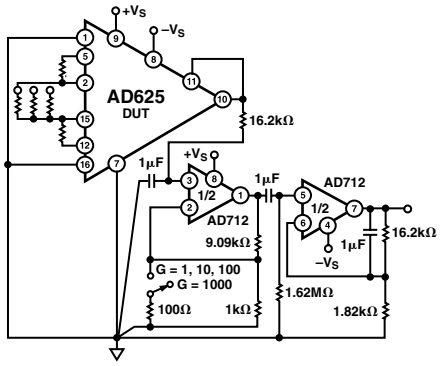

Figure 17. Noise Test Circuit

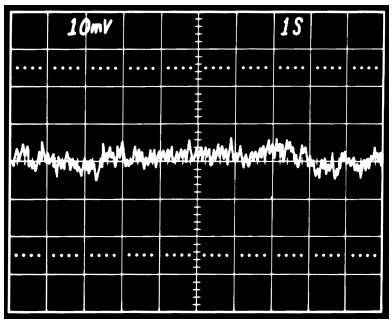

Figure 18. Low Frequency Voltage Noise, G = 1000 (System Gain = 100,000)

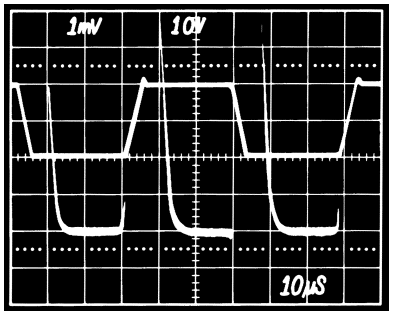

Figure 19. Large Signal Pulse Response and Settling Time, G = 1

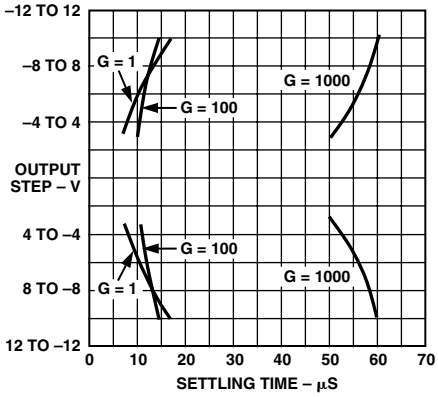

Figure 20. Settling Time to 0.01%

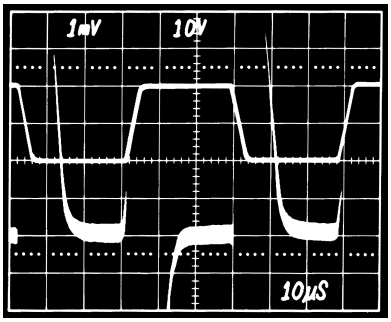

Figure 21. Large Signal Pulse Response and Settling Time, G = 100

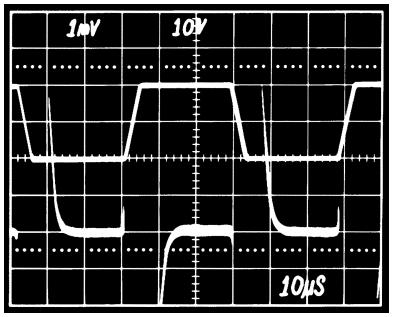

Figure 22. Large Signal Pulse Response and Settling Time, G = 10

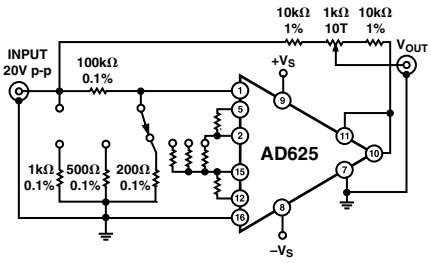

Figure 23. Settling Time Test Circuit

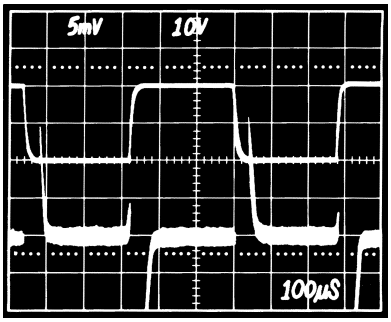

Figure 24. Large Signal Pulse Response and Settling Time, G = 1000

THEORY OF OPERATION

The AD625 is a monolithic instrumentation amplifier based on a modification of the classic three-op-amp approach. Monolithic construction and laser-wafer-trimming allow the tight matching and tracking of circuit components. This insures the high level of performance inherent in this circuit architecture.

A preamp section (Q1–Q4) provides additional gain to A1 and A2. Feedback from the outputs of A1 and A2 forces the collector currents of Q1–Q4 to be constant, thereby, impressing the input voltage across R_G. This creates a differential voltage at the outputs of A1 and A2 which is given by the gain ($2R_F/R_G + 1$) times the differential portion of the input voltage. The unity gain subtracter, A3, removes any common-mode signal from the output voltage yielding a single ended output, V_{OUT}, referred to the potential at the reference pin.

The value of R_G is the determining factor of the transconductance of the input preamp stage. As R_G is reduced for larger gains the transconductance increases. This has three important advantages. First, this approach allows the circuit to achieve a very high open-loop gain of (3×10^8 at programmed gains ≥ 500) thus reducing gain related errors. Second, the gain-bandwidth product, which is determined by C3, C4, and the input transconductance, increases with gain, thereby, optimizing frequency response. Third, the input voltage noise is reduced to a value determined by the collector current of the input transistors (4 nV/√Hz).

INPUT PROTECTION

Differential input amplifiers frequently encounter input voltages outside of their linear range of operation. There are two considerations when applying input protection for the AD625; 1) that continuous input current must be limited to less than 10 mA and 2) that input voltages must not exceed either supply by more than one diode drop (approximately 0.6 V @ 25°C).

Under differential overload conditions there is (R_G + 100) Ω in series with two diode drops (approximately 1.2 V) between the plus and minus inputs, in either direction. With no external protection and R_G very small (i.e., 40 Ω), the maximum overload voltage the AD625 can withstand, continuously, is approximately ±2.5 V. Figure 26a shows the external components necessary to protect the AD625 under all overload conditions at any gain.

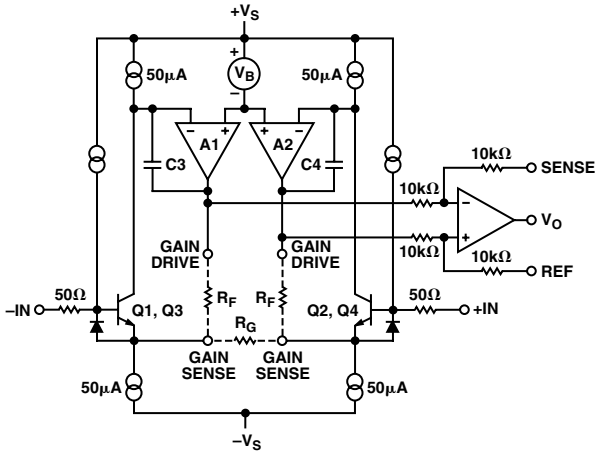

Figure 25. Simplified Circuit of the AD625

The diodes to the supplies are only necessary if input voltages outside of the range of the supplies are encountered. In higher gain applications where differential voltages are small, back-to-back Zener diodes and smaller resistors, as shown in Figure 26b, provides adequate protection. Figure 26c shows low cost FETs with a maximum ON resistance of 300 Ω configured to offer input protection with minimal degradation to noise, (5.2 nV/√Hz compared to normal noise performance of 4 nV/√Hz).

During differential overload conditions, excess current will flow through the gain sense lines (Pins 2 and 15). This will have no effect in fixed gain applications. However, if the AD625 is being used in an SPGA application with a CMOS multiplexer, this current should be taken into consideration. The current capabilities of the multiplexer may be the limiting factor in allowable overflow current. The ON resistance of the switch should be included as part of R_G when calculating the necessary input protection resistance.

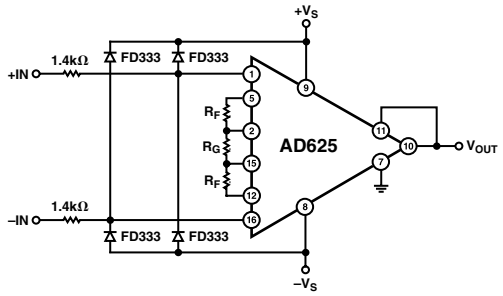

Figure 26a. Input Protection Circuit

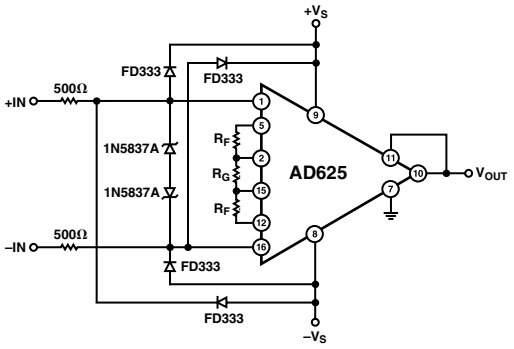

Figure 26b. Input Protection Circuit for G > 5

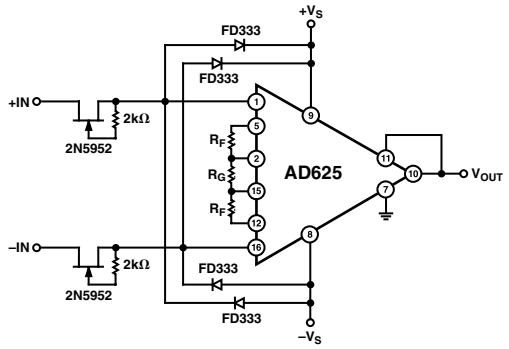

Figure 26c. Input Protection Circuit

Any resistors in series with the inputs of the AD625 will degrade the noise performance. For this reason the circuit in Figure 26b should be used if the gains are all greater than 5. For gains less than 5, either the circuit in Figure 26a or in Figure 26c can be used. The two 1.4 kΩ resistors in Figure 26a will degrade the noise performance to:

$$\sqrt{4\,kTR_{ext} + (4\,nV/\sqrt{Hz})^2} = 7.9\,nV/\sqrt{Hz}$$

RESISTOR PROGRAMMABLE GAIN AMPLIFIER

In the resistor-programmed mode (Figure 27), only three external resistors are needed to select any gain from 1 to 10,000. Depending on the application, discrete components or a pretrimmed network can be used. The gain accuracy and gain TC are primarily determined by the external resistors since the AD625C contributes less than 0.02% to gain error and under 5 ppm/°C gain TC. The gain sense current is insensitive to common-mode voltage, making the CMRR of the resistor programmed AD625 independent of the match of the two feedback resistors, R_F.

Selecting Resistor Values

As previously stated each R_F provides feedback to the input stage and sets the unity gain transconductance. These feedback resistors are provided by the user. The AD625 is tested and specified with a value of 20 kΩ for R_F. Since the magnitude of RTO errors increases with increasing feedback resistance, values much above 20 kΩ are not recommended (values below 10 kΩ for R_F may lead to instability). Refer to the graph of RTO noise, offset, drift, and bandwidth (Figure 28) when selecting the feedback resistors. The gain resistor (R_G) is determined by the formula $R_G = 2\,R_F/(G - 1)$.

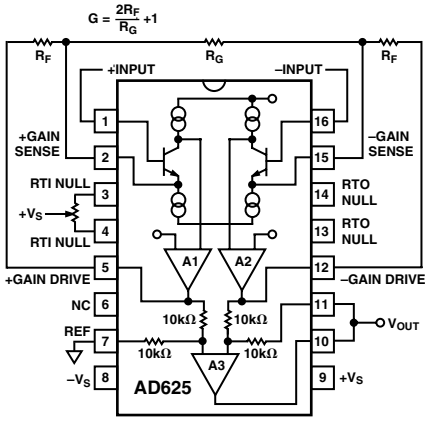

Figure 27. AD625 in Fixed Gain Configuration

A list of standard resistors which can be used to set some common gains is shown in Table I.

For single gain applications, only one offset null adjust is necessary; in these cases the RTI null should be used.

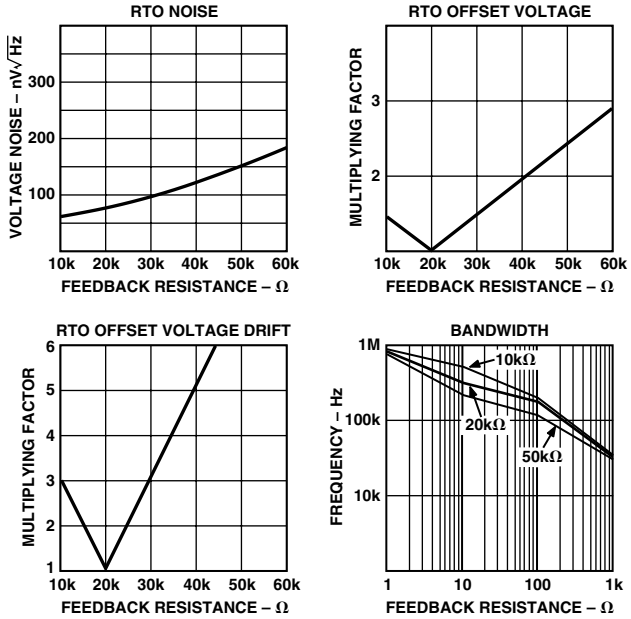

Figure 28. RTO Noise, Offset, Drift and Bandwidth vs. Feedback Resistance Normalized to 20 kΩ

Table I. Common Gains Nominally Within ±0.5% Error Using Standard 1% Resistors

GAIN	R_F	R_G
1	20 kΩ	∞
2	19.6 kΩ	39.2 kΩ
5	20 kΩ	10 kΩ
10	20 kΩ	4.42 kΩ
20	20 kΩ	2.1 kΩ
50	19.6 kΩ	806 Ω
100	20 kΩ	402 Ω
200	20.5 kΩ	205 Ω
500	19.6 kΩ	78.7 Ω
1000	19.6 kΩ	39.2 Ω
4	20 kΩ	13.3 kΩ
8	19.6 kΩ	5.62 kΩ
16	20 kΩ	2.67 kΩ
32	19.6 kΩ	1.27 kΩ
64	20 kΩ	634 Ω
128	20 kΩ	316 Ω
256	19.6 kΩ	154 Ω
512	19.6 kΩ	76.8 Ω
1024	19.6 kΩ	38.3 Ω

SENSE TERMINAL

The sense terminal is the feedback point for the AD625 output amplifier. Normally it is connected directly to the output. If heavy load currents are to be drawn through long leads, voltage drops through lead resistance can cause errors. In these instances the sense terminal can be wired to the load thus putting

the I × R drops "inside the loop" and virtually eliminating this error source.

Typically, IC instrumentation amplifiers are rated for a full ±10 volt output swing into 2 kΩ. In some applications, however, the need exists to drive more current into heavier loads. Figure 29 shows how a high-current booster may be connected "inside the loop" of an instrumentation amplifier. By using an external power boosting circuit, the power dissipated by the AD625 will remain low, thereby, minimizing the errors induced by self-heating. The effects of nonlinearities, offset and gain inaccuracies of the buffer are reduced by the loop gain of the AD625's output amplifier.

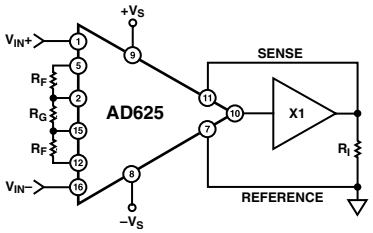

Figure 29. AD625 /Instrumentation Amplifier with Output Current Booster

REFERENCE TERMINAL

The reference terminal may be used to offset the output by up to ±10 V. This is useful when the load is "floating" or does not share a ground with the rest of the system. It also provides a direct means of injecting a precise offset. However, it must be remembered that the total output swing is ±10 volts, from ground, to be shared between signal and reference offset.

The AD625 reference terminal must be presented with nearly zero impedance. Any significant resistance, including those caused by PC layouts or other connection techniques, will increase the gain of the noninverting signal path, thereby, upsetting the common-mode rejection of the in-amp. Inadvertent thermocouple connections created in the sense and reference lines should also be avoided as they will directly affect the output offset voltage and output offset voltage drift.

In the AD625 a reference source resistance will unbalance the CMR trim by the ratio of 10 kΩ/R_{REF}. For example, if the reference source impedance is 1 Ω, CMR will be reduced to 80 dB (10 kΩ/1 Ω = 80 dB). An operational amplifier may be used to provide the low impedance reference point as shown in Figure 30. The input offset voltage characteristics of that amplifier will add directly to the output offset voltage performance of the instrumentation amplifier.

The circuit of Figure 30 also shows a CMOS DAC operating in the bipolar mode and connected to the reference terminal to provide software controllable offset adjustments. The total offset range is equal to ±(V_{REF}/2 × R5/R4), however, to be symmetrical about 0 V R3 = 2 × R4.

The offset per bit is equal to the total offset range divided by 2^N, where N = number of bits of the DAC. The range of offset for Figure 30 is ±120 mV, and the offset is incremented in steps of 0.9375 mV/LSB.

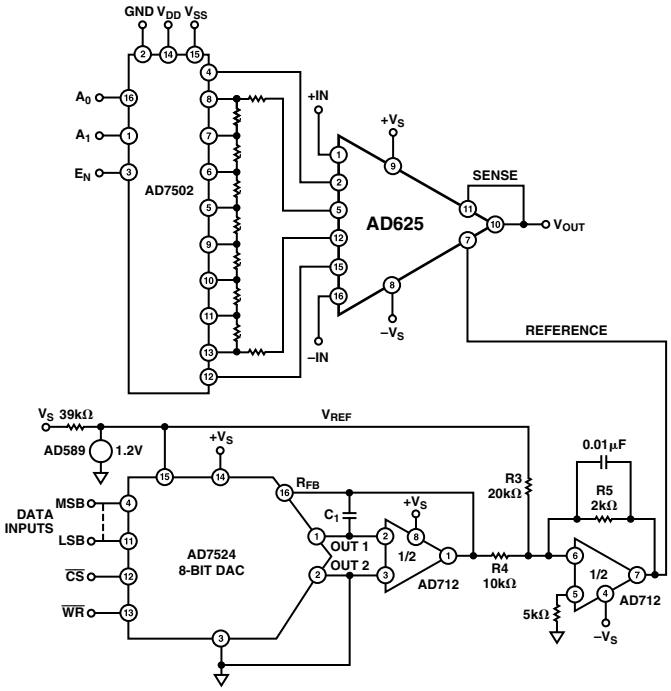

Figure 30. Software Controllable Offset

An instrumentation amplifier can be turned into a voltage-to-current converter by taking advantage of the sense and reference terminals as shown in Figure 31.

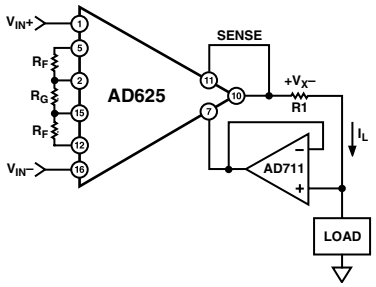

Figure 31. Voltage-to-Current Converter

By establishing a reference at the "low" side of a current setting resistor, an output current may be defined as a function of input voltage, gain and the value of that resistor. Since only a small current is demanded at the input of the buffer amplifier A1, the forced current I_L will largely flow through the load. Offset and drift specifications of A2 must be added to the output offset and drift specifications of the In-Amp.

INPUT AND OUTPUT OFFSET VOLTAGE

Offset voltage specifications are often considered a figure of merit for instrumentation amplifiers. While initial offset may be adjusted to zero, shifts in offset voltage due to temperature variations will cause errors. Intelligent systems can often correct for this factor with an autozero cycle, but this requires extra circuitry.

Offset voltage and offset voltage drift each have two components: input and output. Input offset is that component of offset that is generated at the input stage. Measured at the output it is directly proportional to gain, i.e., input offset as measured at the output at G = 100 is 100 times greater than that measured at G = 1. Output offset is generated at the output and is constant for all gains.

The input offset and drift are multiplied by the gain, while the output terms are independent of gain, therefore, input errors dominate at high gains and output errors dominate at low gains. The output offset voltage (and drift) is normally specified at G = 1 (where input effects are insignificant), while input offset (and drift) is given at a high gain (where output effects are negligible). All input-related parameters are specified referred to the input (RTI) which is to say that the effect on the output is "G" times larger. Offset voltage vs. power supply is also specified as an RTI error.

By separating these errors, one can evaluate the total error independent of the gain. For a given gain, both errors can be combined to give a total error referred to the input (RTI) or output (RTO) by the following formula:

Total Error RTI = input error + (output error/gain)

Total Error RTO = (Gain × input error) + output error

The AD625 provides for both input and output offset voltage adjustment. This simplifies nulling in very high precision applications and minimizes offset voltage effects in switched gain applications. In such applications the input offset is adjusted first at the highest programmed gain, then the output offset is adjusted at G = 1. If only a single null is desired, the input offset null should be used. The most additional drift when using only the input offset null is 0.9 μV/°C, RTO.

COMMON-MODE REJECTION

Common-mode rejection is a measure of the change in output voltage when both inputs are changed by equal amounts. These specifications are usually given for a full-range input voltage change and a specified source imbalance.

In an instrumentation amplifier, degradation of common-mode rejection is caused by a differential phase shift due to differences in distributed stray capacitances. In many applications shielded cables are used to minimize noise. This technique can create

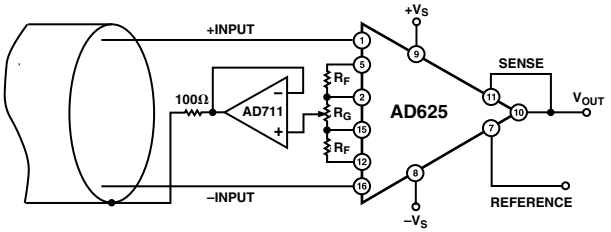

Figure 32. Common-Mode Shield Driver

common-mode rejection errors unless the shield is properly driven. Figures 32 and 33 show active data guards which are configured to improve ac common-mode rejection by "bootstrapping" the capacitances of the input cabling, thus minimizing differential phase shift.

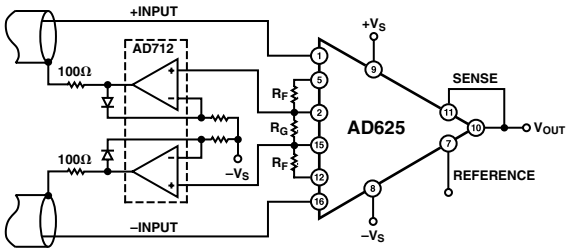

Figure 33. Differential Shield Driver

GROUNDING

In order to isolate low level analog signals from a noisy digital environment, many data-acquisition components have two or more ground pins. These grounds must eventually be tied together at one point. It would be convenient to use a single ground line, however, current through ground wires and pc runs of the circuit card can cause hundreds of millivolts of error. Therefore, separate ground returns should be provided to minimize the current flow from the sensitive points to the system ground (see Figure 34). Since the AD625 output voltage is developed with respect to the potential on the reference terminal, it can solve many grounding problems.

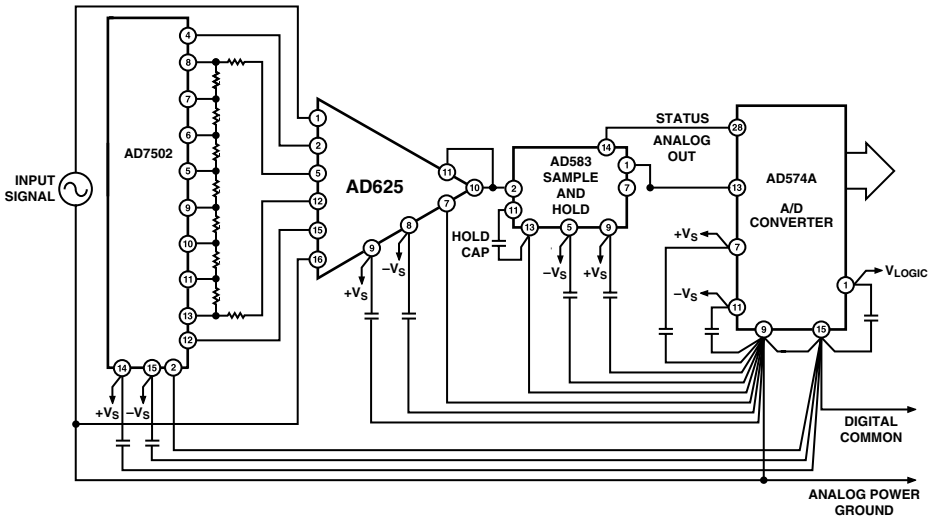

Figure 34. Basic Grounding Practice for a Data Acquisition System

GROUND RETURNS FOR BIAS CURRENTS

Input bias currents are those currents necessary to bias the input transistors of a dc amplifier. There must be a direct return path for these currents, otherwise they will charge external capacitances, causing the output to drift uncontrollably or saturate. Therefore, when amplifying "floating" input sources such as transformers, or ac-coupled sources, there must be a dc path from each input to ground as shown in Figure 35.

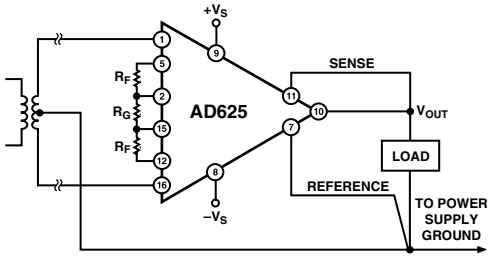

Figure 35a. Ground Returns for Bias Currents with Transformer Coupled Inputs

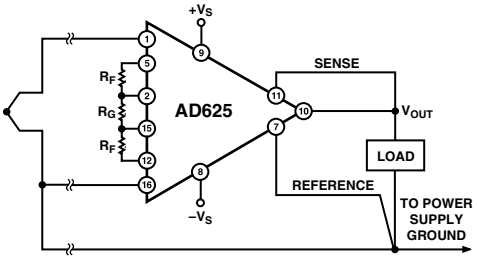

Figure 35b. Ground Returns for Bias Currents with Thermocouple Input

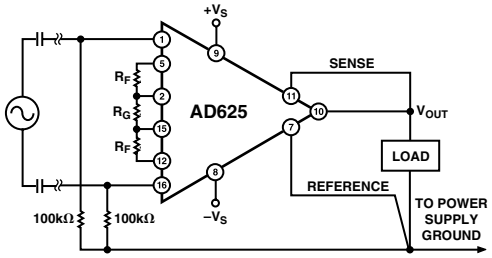

Figure 35c. Ground Returns for Bias Currents with AC Coupled Inputs

AUTOZERO CIRCUITS

In many applications it is necessary to maintain high accuracy. At room temperature, offset effects can be nulled by the use of offset trimpots. Over the operating temperature range, however, offset nulling becomes a problem. For these applications the autozero circuit of Figure 36 provides a hardware solution.

OTHER CONSIDERATIONS

One of the more overlooked problems in designing ultralow-drift dc amplifiers is thermocouple induced offset. In a circuit comprised of two dissimilar conductors (i.e., copper, kovar), a current flows when the two junctions are at different temperatures. When this circuit is broken, a voltage known as the "Seebeck" or thermocouple emf can be measured. Standard IC lead material (kovar) and copper form a thermocouple with a high thermoelectric potential (about 35 μV°C). This means that care must be taken to insure that all connections (especially those in the input circuit of the AD625) remain isothermal. This includes the input leads (1, 16) and the gain sense lines (2, 15). These pins were chosen for symmetry, helping to desensitize the input circuit to thermal gradients. In addition, the user should also avoid air currents over the circuitry since slowly fluctuating

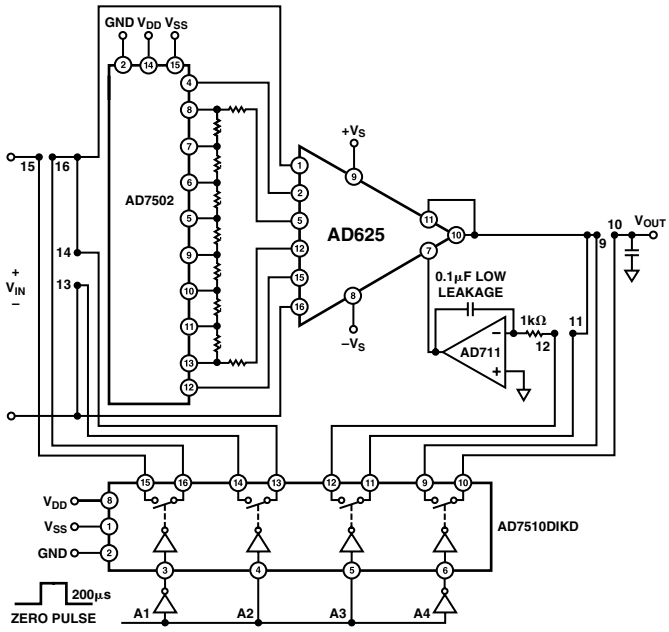

Figure 36. Auto-Zero Circuit

thermocouple voltages will appear as "flicker" noise. In SPGA applications relay contacts and CMOS mux leads are both potential sources of additional thermocouple errors.

The base emitter junction of an input transistor can rectify out of band signals (i.e., RF interference). When amplifying small signals, these rectified voltages act as small dc offset errors. The AD625 allows direct access to the input transistors' bases and emitters enabling the user to apply some first order filtering to these unwanted signals. In Figure 37, the RC time constant should be chosen for desired attenuation of the interfering signals. In the case of a resistive transducer, the capacitance alone working against the internal resistance of the transducer may suffice.

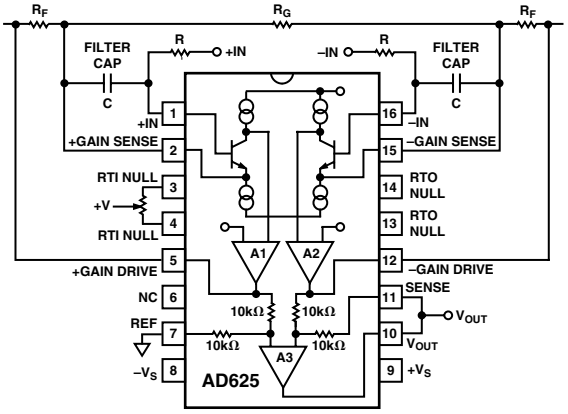

Figure 37. Circuit to Attenuate RF Interference

These capacitances may also be incorporated as part of the external input protection circuit (see section on Input Protection). As a general practice every effort should be made to match the extraneous capacitance at Pins 15 and 2, and Pins 1 and 16, to preserve high ac CMR.

SOFTWARE PROGRAMMABLE GAIN AMPLIFIER

An SPGA provides the ability to externally program precision gains from digital inputs. Historically, the problem in systems requiring electronic switching of gains has been the ON resistance (R_{ON}) of the multiplexer, which appears in series with the gain setting resistor R_G. This can result in substantial gain errors and gain drifts. The AD625 eliminates this problem by making the gain drive and gain sense pins available (Pins 2, 15, 5, 12; see Figure 39). Consequently the multiplexer's ON resistance is removed from the signal current path. This transforms the ON resistance error into a small nullable offset error. To clarify this point, an error budget analysis has been performed in Table II based on the SPGA configuration shown in Figure 39.

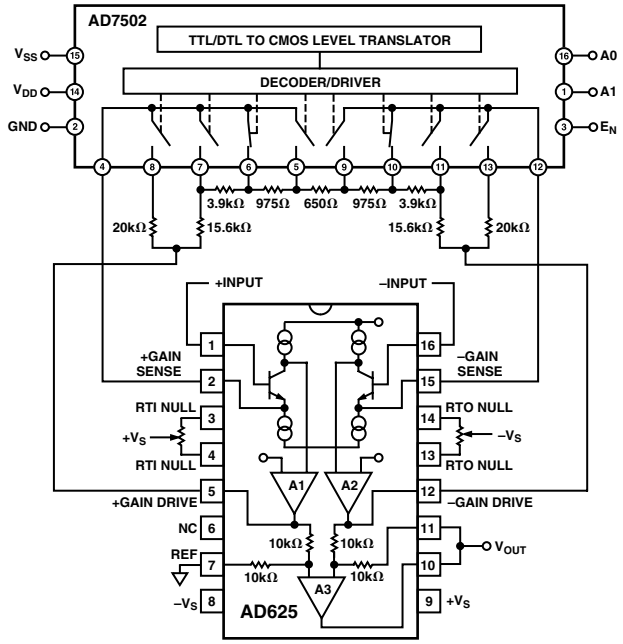

Figure 38. SPGA in a Gain of 16

Figure 38 shows an AD625 based SPGA with possible gains of 1, 4, 16, 64. R_G equals the resistance between the gain sense lines (Pins 2 and 15) of the AD625. In Figure 38, R_G equals the sum of the two 975 Ω resistors and the 650 Ω resistor, or 2600 Ω. R_F equals the resistance between the gain sense and the gain drive pins (Pins 12 and 15, or Pins 2 and 5), that is R_F equals the 15.6 kΩ resistor plus the 3.9 kΩ resistor, or 19.5 kΩ. The gain, therefore equals:

$$\frac{2R_F}{R_G}+1=\frac{2(19.5\,k\Omega)}{(2.6\,k\Omega)}+1=16$$

As the switches of the differential multiplexer proceed synchronously, R_G and R_F change, resulting in the various programmed gain settings.

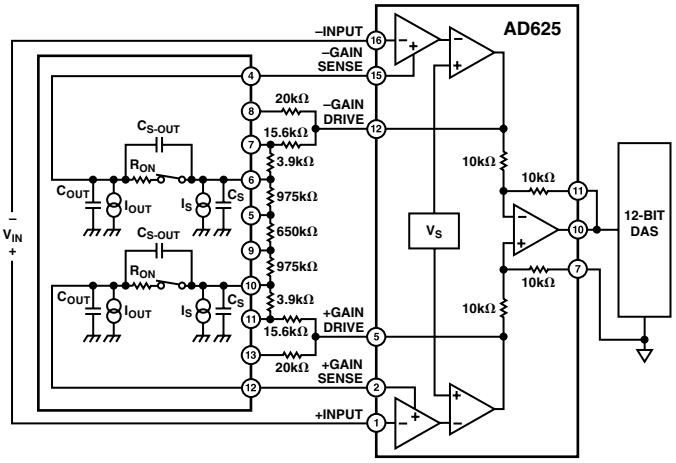

Figure 39. SPGA with Multiplexer Error Sources

Figure 39 shows a complete SPGA feeding a 12-bit DAS with a 0 V–10 V input range. This configuration was used in the error budget analysis shown in Table II. The gain used for the RTI calculations is set at 16. As the gain is changed, the ON resistance of the multiplexer and the feedback resistance will change, which will slightly alter the values in the table.

Table II. Errors Induced by Multiplexer to an SPGA

Induced Error	Specifications AD625C	Specifications AD7520KN	Calculation	Voltage Offset Induced RTI
RTI Offset Voltage	Gain Sense Offset Current 40 nA	Switch Resistance 170 Ω	40 nA × 170 Ω = 6.8 µV	6.8 µV
RTI Offset Voltage	Gain Sense Current 60 nA	Differential Switch Resistance 6.8 Ω	60 nA × 6.8 Ω = 0.41 µV	0.41 µV
RTO Offset Voltage	Feedback Resistance 20 kΩ[1]	Differential Leakage Current (I_S)[2] +0.2 nA –0.2 nA	2 (0.2 nA × 20 kΩ) = 8 µV/16	0.5 µV
RTO Offset Voltage	Feedback Resistance 20 kΩ[1]	Differential Leakage Current (I_{OUT})[2] +1 nA –1 nA	2 (1 nA × 20 kΩ) = 40 µV/16	2.5 µV
Total error induced by a typical CMOS multiplexer to an SPGA at +25°C				**10.21 µA**

NOTES

[1]The resistor for this calculation is the user-provided feedback resistance (R_F). 20 kΩ is recommended value (see Resistor Programmable Gain Amplifier section).

[2]The leakage currents (I_S and I_{OUT}) will induce an offset voltage, however, the offset will be determined by the difference between the leakages of each "half" of the differential multiplexer. The differential leakage current is multiplied by the feedback resistance (see Note 1), to determine offset voltage. Because differential leakage current is not a parameter specified on multiplexer data sheets, the most extreme difference (one most positive and one most negative) was used for the calculations in Table II. Typical performance will be much better.

*The frequency response and settling will be affected by the ON resistance and internal capacitance of the multiplexer. Figure 40 shows the settling time vs. ON resistance at different gain settings for an AD625 based SPGA.

**Switch resistance and leakage current errors can be reduced by using relays.

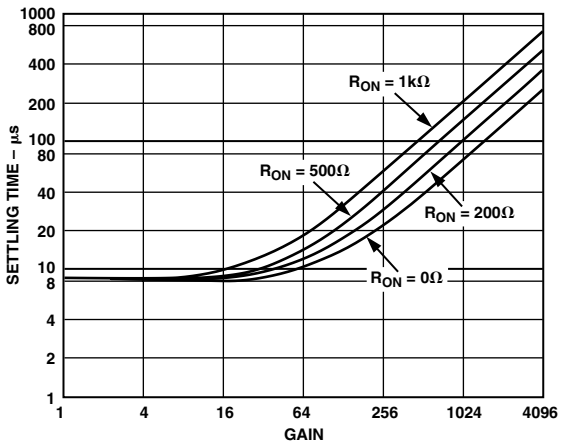

Figure 40. Time to 0.01% of a 20 V Step Input for SPGA with AD625

DETERMINING SPGA RESISTOR NETWORK VALUES

The individual resistors in the gain network can be calculated sequentially using the formula given below. The equation determines the resistors as labeled in Figure 41. The feedback resistors and the gain setting resistors are interactive, therefore; the formula must be a series where the present term is dependent on the preceding term(s). The formula

$$R_{F_{i+1}} = (20\ k\Omega - \sum_{j=0}^{1} R_{F_j})\ (1 - \frac{G_i}{G_{i=1}}) \qquad \begin{matrix} G_0 = 1 \\ R_{F_0} = 0 \end{matrix}$$

can be used to calculate the necessary feedback resistors for any set of gains. This formula yields a network with a total resistance of 40 kΩ. A dummy variable (j) serves as a counter to keep a running total of the preceding feedback resistors. To illustrate how the formula can be applied, an example similar to the calculation used for the resistor network in Figure 38 is examined below.

1) Unity gain is treated as a separate case. It is implemented with separate 20 kΩ feedback resistors as shown in Figure 41. It is then ignored in further calculations.

2) Before making any calculations it is advised to draw a resistor network similar to the network in Figure 41. The network will have (2 × M) + 1 resistors, where M = number of gains. For Figure 38 M = 3 (4, 16, 64), therefore, the resistor string will have seven resistors (plus the two 20 kΩ "side" resistors for unity gain).

3) Begin all calculations with $G_0 = 1$ and $R_{F_0} = 0$.

$R_{F_1} = (20\ k\Omega - R_{F_0})\ (1–1/4)$: $R_{F_0} = 0 \therefore R_{F_1} = 15\ k\Omega$

$R_{F_2} = [20\ k\Omega - (R_{F_0} + R_{F_1})]\ (1–4/16)$:

$R_{F_0} + R_{F_1} = 15\ k\Omega \therefore R_{F_2} = 3.75\ k\Omega$

$R_{F_3} = [20\ k\Omega - (R_{F_0} + R_{F_1} + R_{F_2})]\ (1–16/64)$:

$R_{F_0} + R_{F_1} + R_{F_2} = 18.75\ k\Omega \therefore R_{F_3} = 937.5\ \Omega$

4) The center resistor (R_G of the highest gain setting), is determined last. Its value is the remaining resistance of the 40 kΩ string, and can be calculated with the equation:

$$R_G = (40\ k\Omega - 2\sum_{j=0}^{M} R_{F_j})$$

$$R_G = 40\ k\Omega - 2\ (R_{F_0} + R_{F_1} + R_{F_2} + R_{F_3})$$
$$40\ k\Omega - 39.375\ k\Omega = 625\ \Omega$$

5) If different resistor values are desired, all the resistors in the network can be scaled by some convenient factor. However, raising the impedance will increase the RTO errors, lowering the total network resistance below 20 kΩ can result in amplifier instability. More information on this phenomenon is given in the RPGA section of the data sheet. The scale factor will not affect the unity gain feedback resistors. The resistor network in Figure 38 has a scaling factor of 650/625 = 1.04, if this factor is used on R_{F_1}, R_{F_2}, R_{F_3}, and R_G, then the resistor values will match exactly.

6) Round off errors can be cumulative, therefore, it is advised to carry as many significant digits as possible until all the values have been calculated.

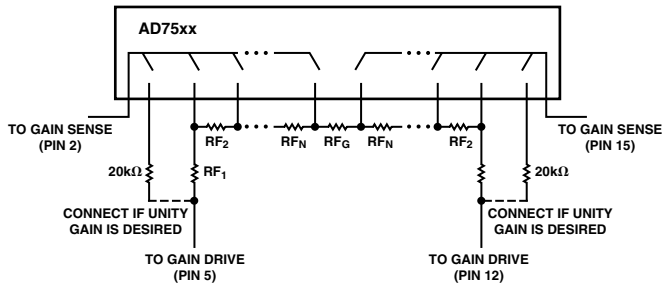

Figure 41. Resistors for a Gain Setting Network

OUTLINE DIMENSIONS

Dimensions shown in inches and (mm).

16-Lead Plastic DIP (N-16)

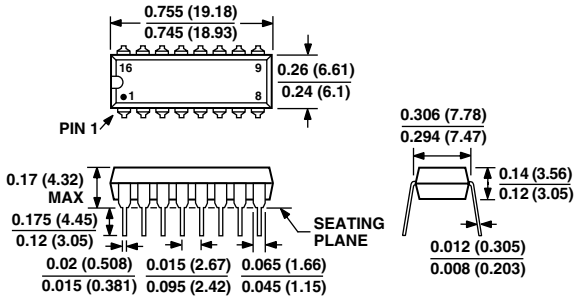

16-Lead Ceramic DIP (D-16)

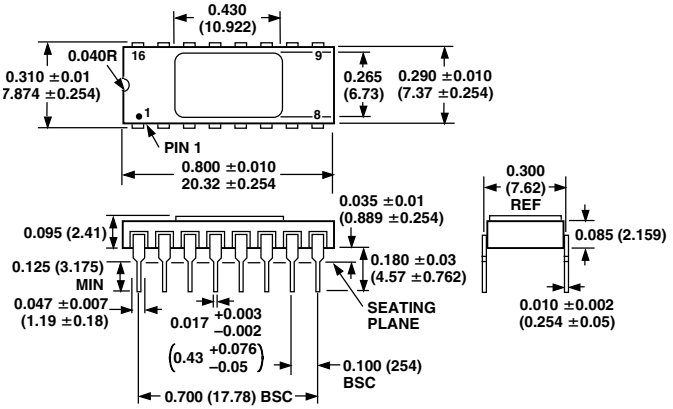

20-Terminal Leadless Chip Carrier (E-20A)

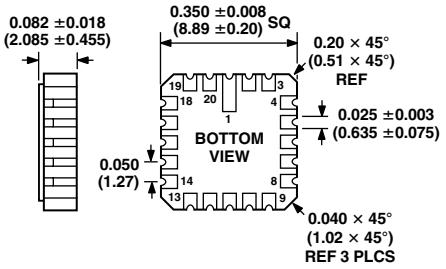

C00780c–0–6/00 (rev. D)

PRINTED IN U.S.A.