CONEXANT

Voice Coprocessor

CX90412/CX90411/CX90410

Conexant's portfolio includes a comprehensive suite of semiconductor solutions for broadband communications, enterprise networks, and the digital home. The Conexant CX90412 Voice Coprocessor (VCP) compresses and decompresses two channels of packet voice from telephone lines or handsets and interfaces to a host network processor over a parallel interface bus. The CX90412 is packaged in a 64-pin QFN.

The CX90410/CX90411 VCP compresses and decompresses one channel of packet voice from a telephone line or handset and interfaces to a host network processor over a parallel interface bus. The CX90411 is packaged in a 64-pin QFN and CX90410 an 80-pin PQFP. CX90410 is pin compatible to CX9168 voice coprocessor. The host network processor can typically be a Conexant CX821xx or CX86202 home network processor (HNP), an ADSL router or a CX82310 single-chip ADSL router. When coupled with software provided with the CX9041x, the HNP and VCP device set implements voice control functions and network/communications protocols, and interfaces to a host computer over an Ethernet or USB connection.

The CX9041x VCP interfaces to telephone handsets through subscriber line interface circuit/subscriber line audio-processing circuit (SLIC/SLAC) devices that provide the required analog control signals and line power to the telephone, as well as analog-to-digital and digital-to-analog conversion. Each channel of the CX90412 VCP can run compression and decompression algorithms according to the ITU-T G.7xx series of codecs that are commonly used in VoIP and VoDSL services.

The host network processor interfaces to the CX9041x VCPs through its host interface bus and provides a platform on which voice control functions and network or communications protocols may be implemented. Different combinations of Foreign Exchange – Station (FXS) and Foreign Exchange Office (FXO) applications can be easily supported.

The company's broad portfolio of semiconductor products also includes client-side DSL and cable modem solutions, home network processors, broadcast video encoders and decoders, digital set-top box components and systems solutions, and dial-up modems. In addition to its IEEE 802.11a/b/g-compliant WLAN chipsets, software, and reference designs, Conexant offers a suite of networking components that includes solutions for applications based on HomePlug℠ and HomePNA™. Additional products include a complete line of asymmetric and symmetric DSL central office solutions, which are used by service providers worldwide to deliver broadband data, voice, and video over copper telephone lines.

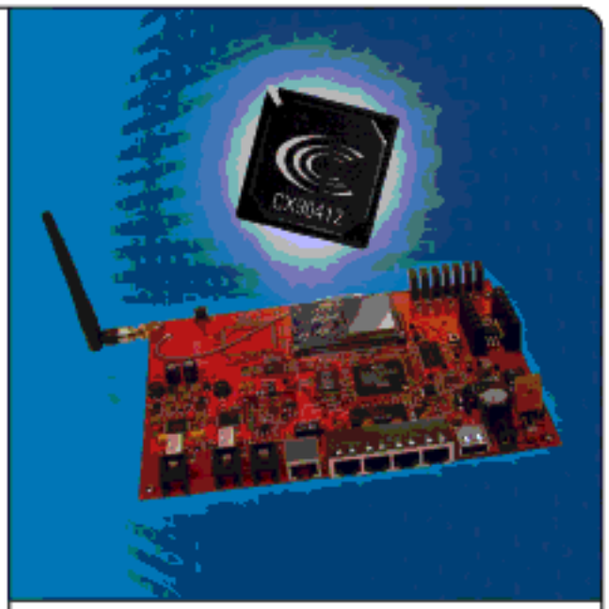

Distinguishing Features

- Fully integrated device including memory
- G.711, G.723.1, G.726, and G.729AB codecs
- Glueless interface to SLIC/SLACs
- Glueless interface to the processors for multi-line support
- CX90411/CX90412 packaged in a 64-pin QFN
- CX90410 packaged in an 80-pin PQFP

Part Number CX90412/CX90411/CX90410
Description Voice Coprocessor

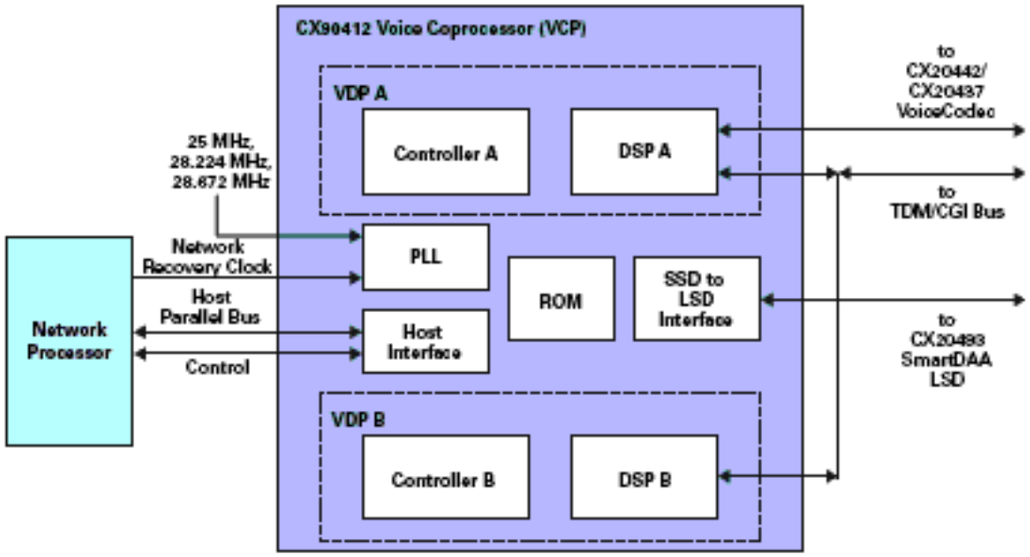

CX90412 Voice Coprocessor (VCP) Simplified Interface System Block Diagram

Product Features

- Fully integrated device including memory
- G.711, G.723.1, G.726, and G.729A,B codecs
- Echo cancellation (G.165, G.168 compliant)
- Tone detection and generation (DTMF, dial tone, call waiting, busy, etc.)
- Dynamic jitter buffer
- Bell 202 and V.23 Caller ID
- T.38 fax support
- Packet loss concealment
- Voice activity detection (VAD)
- Comfort noise generation
- Automatic fax/modem detection and pass-through
- TDM bus clocks generation
- Integrated system side device (SSD) for FXO support (CX90412 and CX90411 only)
- Glueless interface to the processors for multi-line support
- Glueless interface to SLIC/SLACs
- Speakerphone
- Acoustic echo cancellation (AEC)
- CX90412 VCP supports two voice channels
- CX90411 VCP supports one voice channel
- CX90410 VCP supports one voice channel and is pin-compatible with the CXP9168

Applications

- Ethernet router with VoIP
- DSL router with VoIP
- Integrated access device (IAD)
- VoIP phone
- MTU/MDU voice and data system

© 2004, Conexant Systems, Inc. All Rights Reserved. Conexant and the Conexant logo are registered trademarks of Conexant Systems, Inc. All other trademarks are owned by their respective owners. Although Conexant strives for accuracy in all its publications, this material may contain errors or omissions and is subject to change without notice. THIS MATERIAL IS PROVIDED AS IS AND WITHOUT ANY EXPRESS OR IMPLIED WARRANTIES, INCLUDING MERCHANTABILITY, FITNESS FOR A PARTICULAR PURPOSE AND NON-INFRINGEMENT. Conexant shall not be liable for any special, indirect, incidental or consequential damages as a result of its use.

www.conexant.com
General Information:
U.S. and Canada: (888) 855-4562
International: (732) 345-7500
Headquarters
4000 MacArthur Blvd.
Newport Beach, CA 92660

Order# 102763A

CONEXANT