KBPC 5000F ... KBPC 5012F

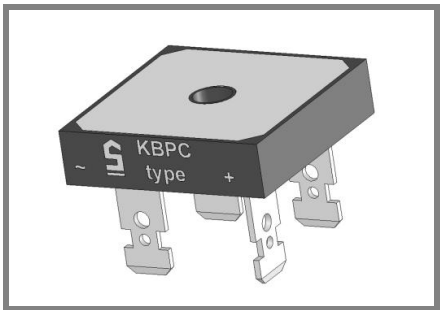

Square bridge

Type	Alternating input voltage V_{RMS} V	Repetetive peak reverse voltage V_{RRM} V
KBPC 5000 F	35	50
KBPC 5001 F	70	100
KBPC 5002 F	140	200
KBPC 5004 F	280	400
KBPC 5006 F	420	600
KBPC 5008 F	560	800
KBPC 5010 F	700	1000
KBPC 5012 F	800	1200

Silicon-Bridge Rectifiers

KBPC 5000F ... KBPC 5012F

Forward Current: 50 A

Reverse Voltage: 50 to 1200 V

Publish Data

Features

- max. solder temperature 260°C, max. 5s
- UL recognized, file no. E63532
- Standard packaging: bulk
- V_{ISO} > 2500 V

Mechanical Data

- Plastic case with alu-bottom 28,6 * 28,6 * 7,3 [mm]
- Weight approx. 18 g
- Terminals: plated terminals solderable per IEC 68-2-20
- Mounting position: any
- Admissible torque for mounting (M 5): 2 (± 10 %) N
- F - faston only

Absolute Maximum Ratings T_c = 25 °C unless otherwise specified

Symbol	Conditions	Values	Units
I_{FRM}	Repetitive peak forward current; f > 15 Hz[1)]	90	A
I^2t	Rating for fusing, t < 10 ms	800	A^2s
I_{FSM}	Peak forward surge current, 50 Hz half sine-wave T_A = 25 °C	450	A
I_{FAV}	Max. averaged fwd. current, R-load, T_A = 50 °C [1)]	not applicable	A
I_{FAV}	Max. averaged fwd. current, C-load, T_A = 50 °C [1)]	not applicable	A
I_{FAV}	Max. current with cooling fin, R-load, T_C = 100 °C [2)]	50	A
I_{FAV}	Max. current with cooling fin, C-load, T_C = 100 °C [2)]	46	A
R_{thA}	Thermal resistance junction to ambient [1)]		K/W
R_{thC}	Thermal resistance junction to case [1)]	1,2	K/W
T_j	Operating junction temperature	- 50 ... + 150	°C
T_s	Storage temperature	- 50 ... + 150	°C

Characteristics T_c = 25 °C unless otherwise specified

Symbol	Conditions	Values	Units
V_F	Maximum forward. voltage, T_j = 25 °C; I_F = 25 A	1,1	V
I_R	Maximum Leakage current, T_j = 25 °C; V_R = V_{RRM}	25	µA
C_J	Typical junction capacitance per leg at V, MHz		pF

Dimensions in mm

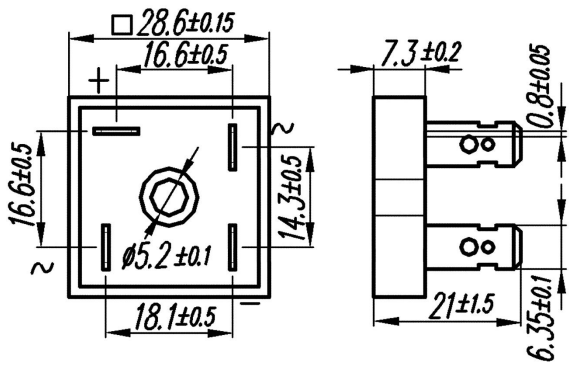

 © by SEMIKRON

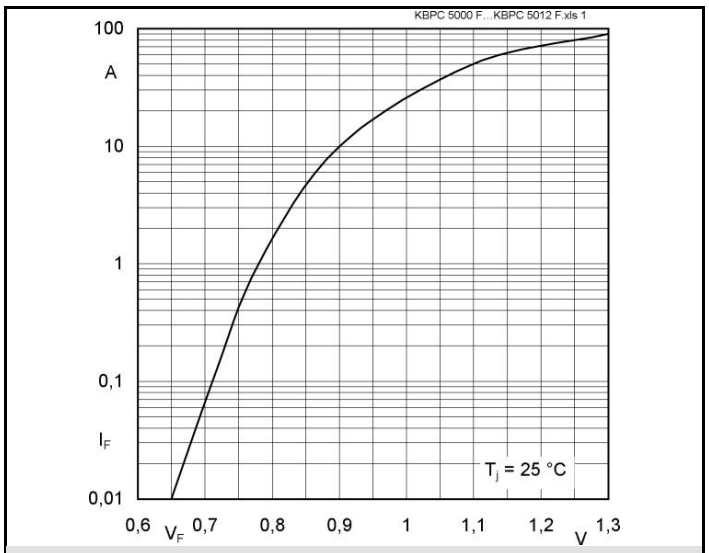

Fig. 1 : Forward characteristics (typical values)

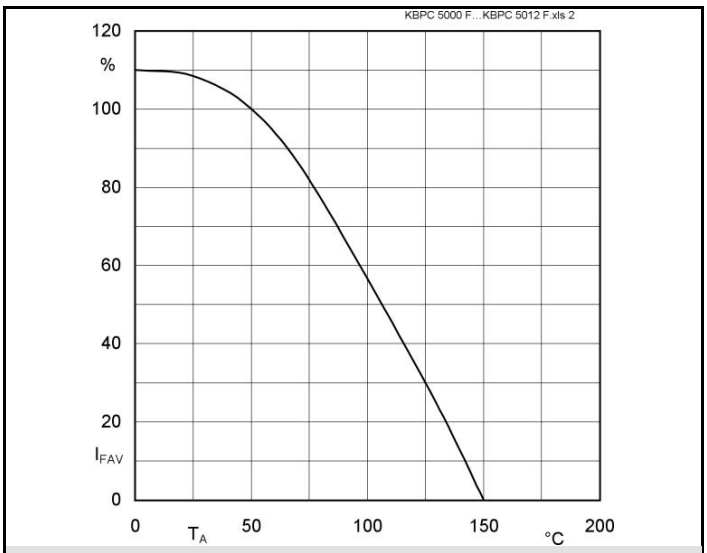

Fig. 2 : Rated forward current vs. ambient temperature

 © by SEMIKRON