# KC7783
# PIR Sensor Module

## General

KC7783 is a pyroelectric sensor module which developed for human body detection. A PIR detector combined with a fresnel lens are mounted on a compact size PCB together with an analog IC, KC778B, and limited components to form the module. High level output of variable width is provided.

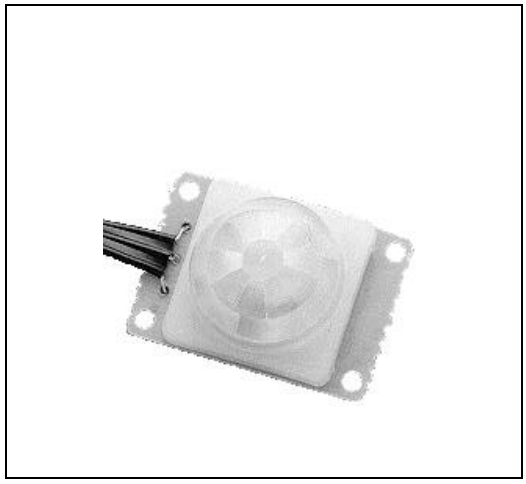

## Features

- Compact size (25 x 35 mm)
- Wide range of operation voltage 4-12V
- Special output pulse width can be requested
- TTL output can be directly connected to micro controller or logic device
- High sensitivity
- High RFI immunity
- Power up delay 25sec

## Electrical Specification

| | |
|---|---|
| Operation Volage | 4 - 12V |
| Operation Current | 400µA at 5V |
| PIR Input Gain | 68dB |
| Output Pulse Width | 0.5 sec min |
| Operation Temperature | -20°C -50°C |

**Lens Information**

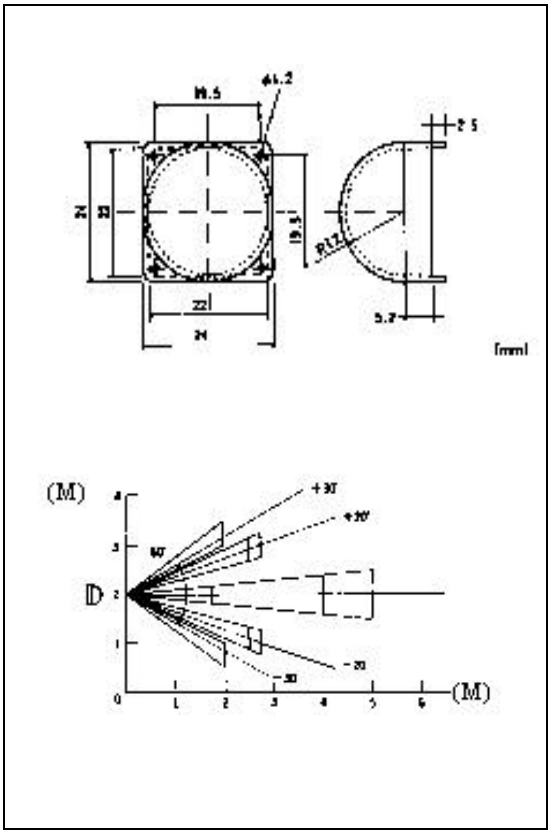


## Note :

Due to the high sensitivity of PIR sensor device, it is not recommended to use the module in the following or similar condition.

A) in rapid environmental changes
B) in strong shock or vibration
C) in a place where there are obstructing material (eg. glass) through which IR cannot pass within detection area.
D) exposed to direct sun light
E) exposed to direct wind from a heater or air conditioner.