MXH Series – 2.0 x 2.5 Ceramic SMD Oscillator

- **Low Profile SMD Package**
- **Hermetically Sealed**
- **RoHS Compliant**
- **Wide Frequency Range**

ELECTRICAL SPECIFICATIONS:

Frequency Range		**1.544MHZ to 80.000MHZ**			
Temperature Stability*		**(See Part Number Guide for Options)**			
Operating Temperature Range		**(See Part Number Guide for Options)**			
Storage Temperature Range		**-40°C to +85°C**			
Aging (+25°C ±3°C)		**±5ppm for first year**			
Supply Voltage ±10% (Vdd)		**+1.80 VDC**	**+2.50 VDC**	**+3.30 VDC**	**+5.00 VDC**
Supply Current	**1.544MHZ to 9.999MHZ**	**6mA max**	**7mA max**	**8mA max**	**10mA max**
	10.000MHZ to 34.999MHZ	**7mA max**	**8mA max**	**10mA max**	**20mA max**
	35.000MHZ to 49.999MHZ	**15mA max**	**20mA max**	**25mA max**	**50mA max**
	50.000MHZ to 80.000MHZ	**25mA max**	**30mA max**	**35mA max**	**60mA max**
Waveform		**HCMOS**			
Logic "0"		**10% Vdd max**			
Logic "1"		**90% Vdd min**			
Rise/Fall Time (10% to 90% of Supply Voltage)		**4nSec**			
Symmetry (50% of waveform)		**40%/60% (45%/55% optional)**			
Start-up Time		**10mSec max**			
Absolute Clock Period Jitter		**40pSec**			
Tri-State Operation		**Voh = 70% of Vdd min to Enable Output Vol = 30% max or grounded to Disable Output (High Impedance)**			

MECHANICAL DIMENSIONS:

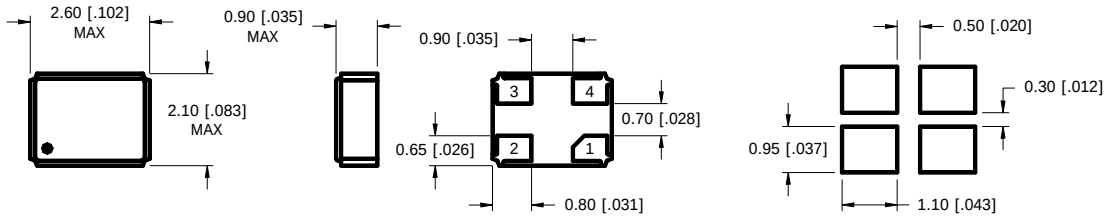

PIN CONNECTIONS	
PIN 1	TRI-STATE
PIN 2	CASE GROUND
PIN 3	OUTPUT
PIN 4	SUPPLY VOLTAGE

DIMENSION IN BRACKETS ARE IN INCHES
EXTERNAL BYPASS CAPACITOR IS RECOMMENDED

RECOMMENDED
LAND PATTERN

PART NUMBER GUIDE:

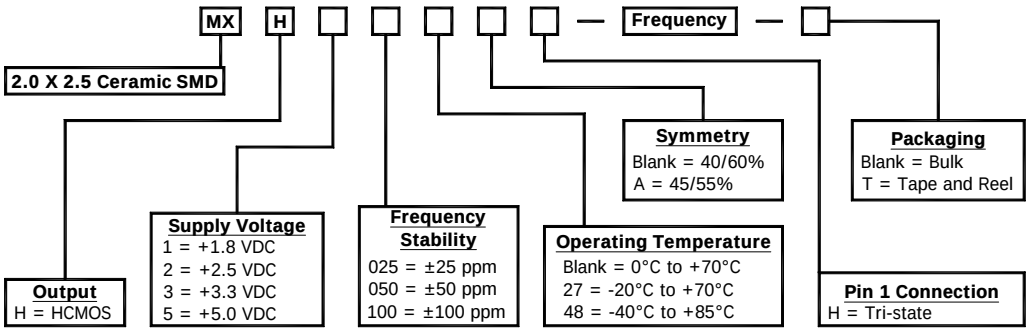

Please Consult with MMD Sales Department for any other Parameters or Options

MMD Components, 30400 Esperanza, Rancho Santa Margarita, CA, 92688
Phone: (949) 709-5075, Fax: (949) 709-3536, www.mmdcomp.com
Sales@mmdcomp.com