STC403F

NPN Silicon Transistor

Applications

- Power amplifier application
- High current switching application

PIN Connection

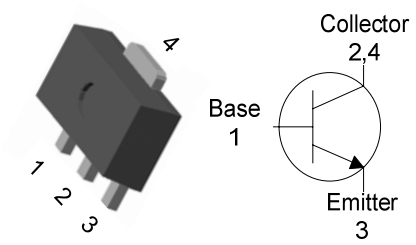

SOT-89

Features

- Power transistor General Purpose application
- Low saturation voltage
  : $V_{CE(sat)}$=0.4V(Typ.)
- High Voltage: VCEO= 60V Min

Ordering Information

Type No.	Marking	Package Code
STC403F	C403 YWW	SOT-89

C403: DEVICE CODE, YWW(Y : Year code, WW : Weekly code)

Absolute Maximum Ratings

[Ta=25℃]

Characteristic	Symbol	Rating	Unit
Collector-Base voltage	V_{CBO}	80	V
Collector-Emitter voltage	V_{CEO}	60	V
Emitter-base voltage	V_{EBO}	5	V
Collector current	I_C	3	A(DC)
	I_{CP}*	6	A(Pulse)
Collector Power dissipation	P_C	0.5	W
	P_C**	1	
Junction temperature	T_j	150	°C
Storage temperature	T_{stg}	-55~150	°C

* : Single pulse, tp= 300 μs

** : When mounted on ceramic substrate(250 ㎟×0.8t)

Electrical Characteristics

(Ta=25°C)

Characteristic		Symbol	Test Condition	Min.	Typ.	Max.	Unit
Collector-Emitter breakdown voltage		BV_{CEO}	I_C=50mA, I_B=0	60	-	-	V
Collector cut-off current		I_{CBO}	V_{CB}=60V, I_E=0	-	-	50	μA
Emitter cut-off current		I_{EBO}	V_{EB}=5V, I_C=0	-	-	50	μA
DC current gain		h_{FE} *	V_{CE}=5V, I_C=0.5A	200	-	400	-
Base-Emitter on voltage		$V_{BE(ON)}$	V_{CE}=5V, I_C=0.5A	-	0.7	1	V
Collector-Emitter saturation voltage		$V_{CE(sat)}$	I_C=2A, I_B=0.2A	-	0.4	1	V
Transition frequency		f_T	V_{CB}=5V, I_C=0.5A	-	30	-	MHz
Collector output capacitance		C_{ob}	V_{CB}=10V, I_E=0, f=1MHz	-	35	-	pF
Switching Time	Turn-on Time	t_{on}	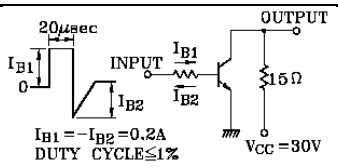	-	0.65	-	μs
	Storage Time	t_{stg}		-	1.3	-	
	Fall Time	t_f		-	0.65	-	

* hFE rank : 200~400 Only

Electrical Characteristic Curves

Fig. 1 P_C - Ta

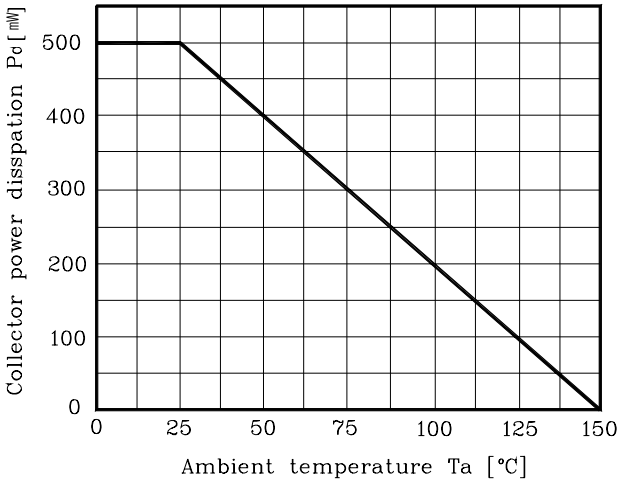

Fig. 2 V_{CE} - I_C

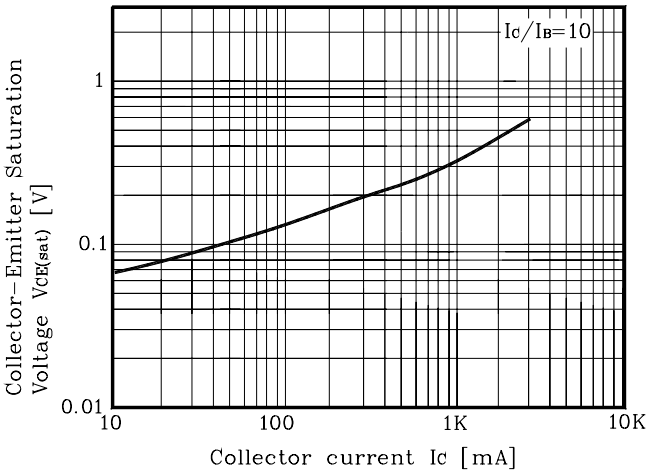

Fig. 3 h_{FE}-I_C

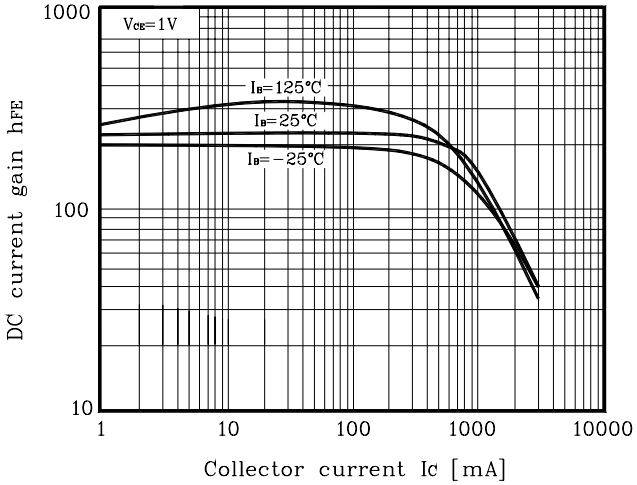

Fig. 4 h_{FE}-I_C

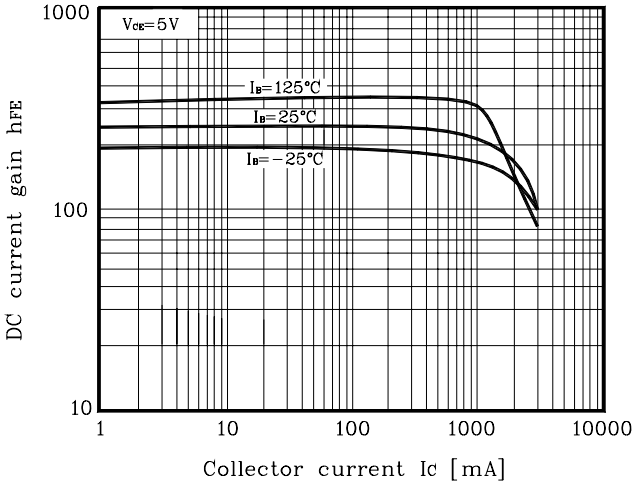

Fig. 5 I_C - V_{CE}

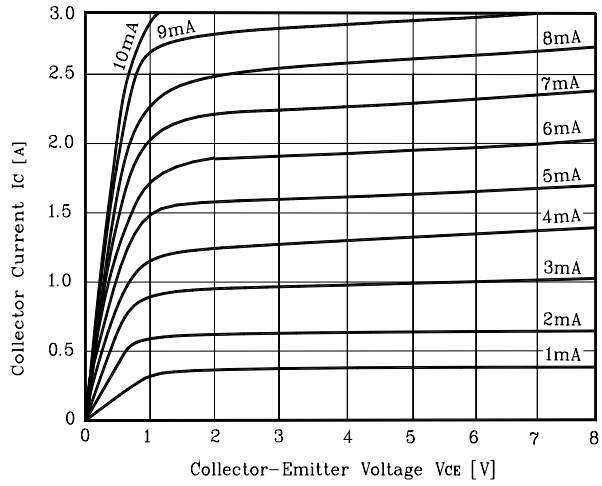

Fig. 6 I_C - V_{CE}

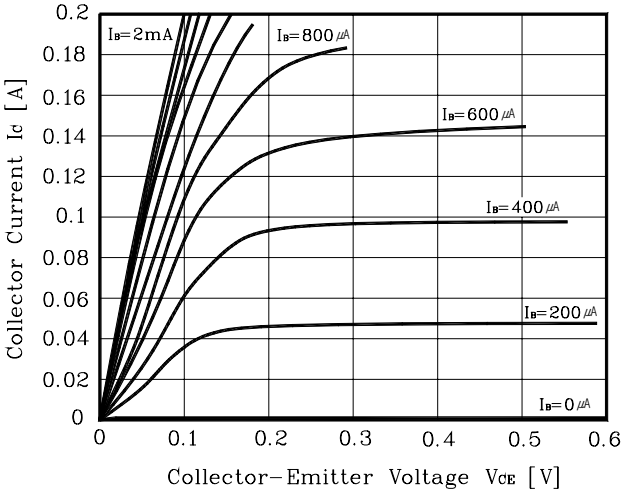

Electrical Characteristic Curves

Fig. 7 Safe operating Area

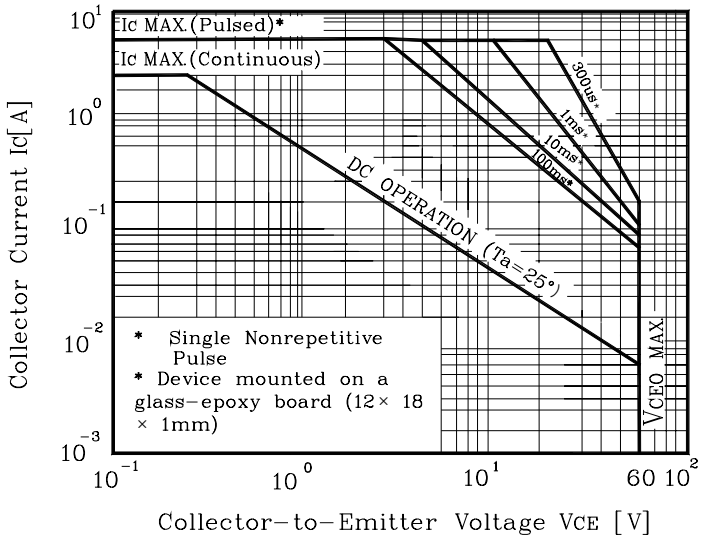

Outline Dimension(mm)

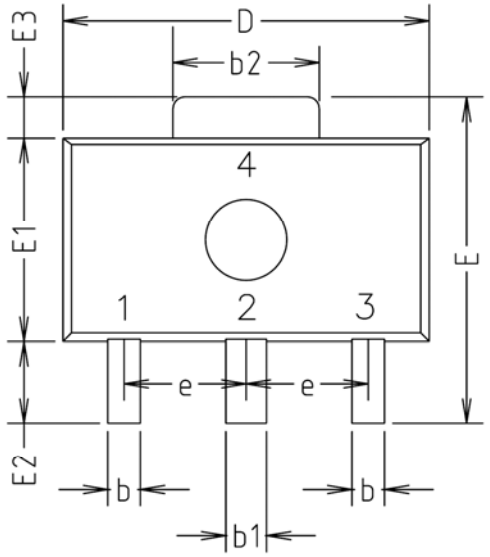

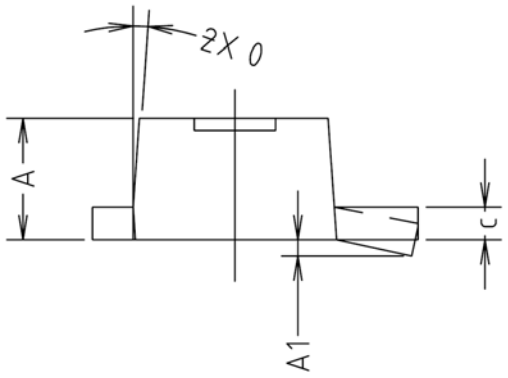

SYMBOL	MILLIMETERS			NOTE
	MINIMUM	NOMINAL	MAXIMUM	
A	1.40	1.50	1.60	
A1	0.00	–	0.10	
b	0.38	0.42	0.48	
b1	0.48	0.52	0.58	
b2	1.79	1.82	1.87	
c	0.40	0.42	0.46	
D	4.40	4.50	4.70	
E	3.70	4.00	4.30	
E1	2.40	2.50	2.70	
E2	0.80	1.00	1.20	
E3	0.40	0.50	0.60	
e	1.50 TYP.			
θ	4° TYP.			

※Recommend PCB solder land [Unit: mm]

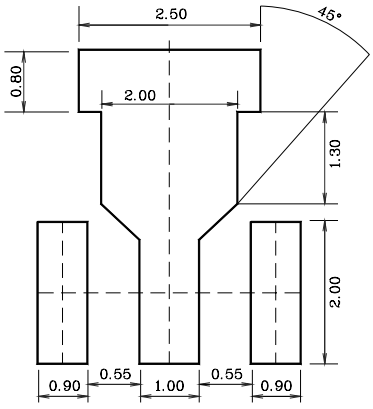

The AUK Corp. products are intended for the use as components in general electronic equipment (Office and communication equipment, measuring equipment, home appliance, etc.).

Please make sure that you consult with us before you use these AUK Corp. products in equipments which require high quality and / or reliability, and in equipments which could have major impact to the welfare of human life(atomic energy control, airplane, spaceship, transportation, combustion control, all types of safety device, etc.). AUK Corp. cannot accept liability to any damage which may occur in case these AUK Corp. products were used in the mentioned equipments without prior consultation with AUK Corp..

Specifications mentioned in this publication are subject to change without notice.