October 18, 2002

Sanken introduces "STR-W 6800 Series ICs" for Quasi-Resonant Switch Mode Power Supply that enables high efficiency, low noise and drastic save of power consumption at the time of stand-by.

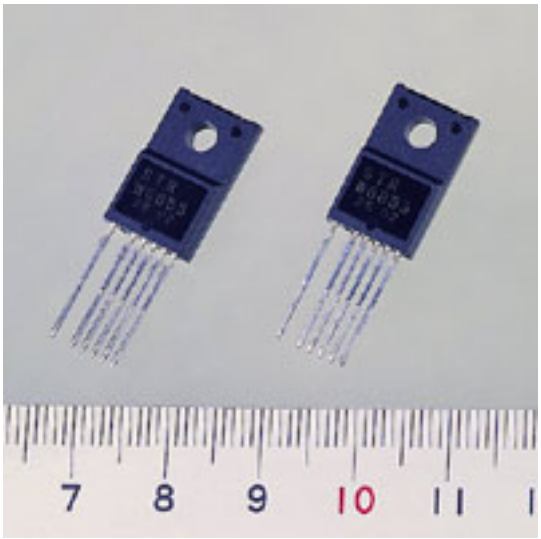

Sanken Electronic Co., Ltd. has developed "STR-W 6800 Series ICs" for Quasi-Resonant SMPS with high efficiency and low noise that consume only one-tenth of the electric power compared with that of our conventional devices. Shipments of the new series will begin from October 25, 2002. Initially Sanken is planning to begin monthly volume production of 100,000 per month. The monthly sales volume will be increased to 500,000 by the end of 2002. The sample price is three hundred (300) yen per piece.

Recently there has been a strong demand for save of power consumption for TVs, VTRs and other electric appliances. Especially in the case of remote controlled home electric appliances, the annual stand-by power consumption to electricity all told is quite high although the absolute consumption itself is small. That is why demand for reduction of stand-by power consumption is strong these days.

Quasi-Resonant SMPS with low noise, is widely used as the video signals of AV equipments such as TV, VTR are fragile to noise. However, the conventional Quasi-Resonant SMPS has a drawback; its efficiency tends to be degraded by the high operating frequency at

high input voltage or light load condition. In order to resolve this drawback, we have developed new "STR-W 6800 Series ICs" which is able to hold 70kHz by the function of what is called "Multi-bottom Skip Operation" (*1) when the high operating frequency exceeds 70kHz. By means of restraining the frequency of 70kHz, the efficiency of about 79% will be guaranteed (at the time of electricity output of 10W), which is improved by 14 % compared with the conventional ones.

When the load is light at the time of stand-by, "Time Fix Control Operation" (*2) will operate and make input power less than 0.5W (at the AC input 230V) by holding frequency less than around 2kHz (at the output power of 0.05W), which ranks the technology of Sanken top class among the competitors.

As explained, "STR-W 6800 Series ICs" guarantees high efficiency at the wide areas from the heavy load to stand-by load by means of the automatic change-over of the operation modes. The new series will surely contribute to the save of power consumption as TV, VTR and others are more and more high function and digitalized.

*1 "Multi-Bottom Skip Operation"
In usual Quasi-Resonant operation, operating frequency will be high as load isgetting lighter. On the other hand, Multi-Bottom Skip Operation makes the ceiling of operating frequency (fixed operating frequency), prevents inefficiency and reduces switching loss by turn-on at the bottom of fixed operating frequency like Quasi-Resonant operation. In actual operation, the number of skip to bottom, which depends on the load (operating frequency), will be changed as the turn-on is done at the bottom after having reached the fixed operating frequency.

*2 "Time Fix Control Operation"
At the time of stand-by load, when on-time is shorter than the fixed time set inside, the on-time will output long forcibly and output voltage will be stabilized with controlling change of load by off-time. Moreover it makes operating frequency drastically low and reduce switching loss.

< Features of STR-W6800 Series >

1. In accordance with input and output conditions, operation mode is automatically changed by way of three-step channels and makes it possible to be high efficiency in all loading areas.
   · At the time of heavy load: Quasi-Resonant operation.
   · At the time of light or medium load: Multi-Bottom Skip Operation.
   · At the time of stand-by load: Time Fix Control Operation.

2. New package has been adopted (Sanken brand name; FM207)
   By introducing this new package, the power devices, which are able to stand much higher voltage, can be mounted(withstand more than 900V compared with 700V of conventional packaging) by means of widening the distance among pins where high voltage are charged.
   * When 900V MOSFET are mounted, external components can be reduced.

3. In addition to regular protection functions, protection scheme for heavy load is built-in which is functioning by outer constant until regular protection works.

4. By adopting chip-on-chip construction, even small package (equivalent to TO-220 F) can deal with big power.

< Lineup >

Part Number	MOSFET Breakdown Voltage	Input V.	Output Power	Remarks
STR-W6851	650V	AC90V to 276V	25W	
STR-W6852	650V	AC90V to 276V	40W	
STR-W6853	650V	AC90V to 276V	60W	
STR-W6854	650V	AC90V to 276V	100W	Chip-on-chip
STR-W6856	650V	AC90V to 276V	150W	Chip-on-chip

* We are planning to introduce MOSFETs with other breakdown voltage such as 450V, 800V and 900V.

Top of Page

Copyright 2006 SANKEN ELECTRIC CO.,LTD.

1.9 Switch-mode Power Supply STR- W68XX

(1) General Description

The STR-W6800 Series are thick-film ICs for Quasi-Resonant flyback SMPS with MOSFET and control built-in, featuring fewer external components, simplified circuit design, small-size and standard power supply.

“STR-W6800 Series ICs” offers three operation modes: Quasi-Resonant, Multi-Bottom Skip and Time Fix Control, thus guaranteeing high efficiency in all loading areas by means of the automatic change-over of the operation modes.

QR---- Quasi-Resonant operation at the time of heavy load

MBS---- Multi-Bottom Skip operation at the time of medium load for preventing oscillating frequency rising up and fixing operating frequency

TFC---- Time Fix Control at the time of light load such as stand-by load

By adopting chip-on-chip construction, even small package can deal with big power.

(2) Features

- Seven-pin small SIP style package FM207 (generally called TO220), affording dielectric isolation
- Guarantees space of 1.8mm between high voltage pin and other pins, thus high voltage MOSFET built-in allowed
- Offers low startup current by employing BCD-Process
- Automatic change-over of QR and MBS operations
  With MOSFET turn-on at the bottom of VDS, "STR-W 6800 Series ICs" offers high efficiency and low noise at the wide areas from the heavy load to stand-by load and fixed operating frequency, and enables SMPS to become smaller.
- TFC operation delivers low-power standby mode for fixing turn-on time, enabling external components to adjust turn-on time.
- Avalanche breakdown energy-guaranteed and high damage-resistance power MOSFET
  By guaranteeing avalanche breakdown energy of built-in power MOSFET, "STR-W 6800 Series ICs" simplifies design of absorption circuit of surge voltage without VDSS residual considered during design.
- MOSFET fixed voltage drive circuit built in
- Various protection functions
  Pulse-by-pulse over-current protection
  Over-voltage protection →lockout
  Over-load protection →lockout
  Thermal protection →lockout (not for STR-W6854/6)

(3) Black Diagram

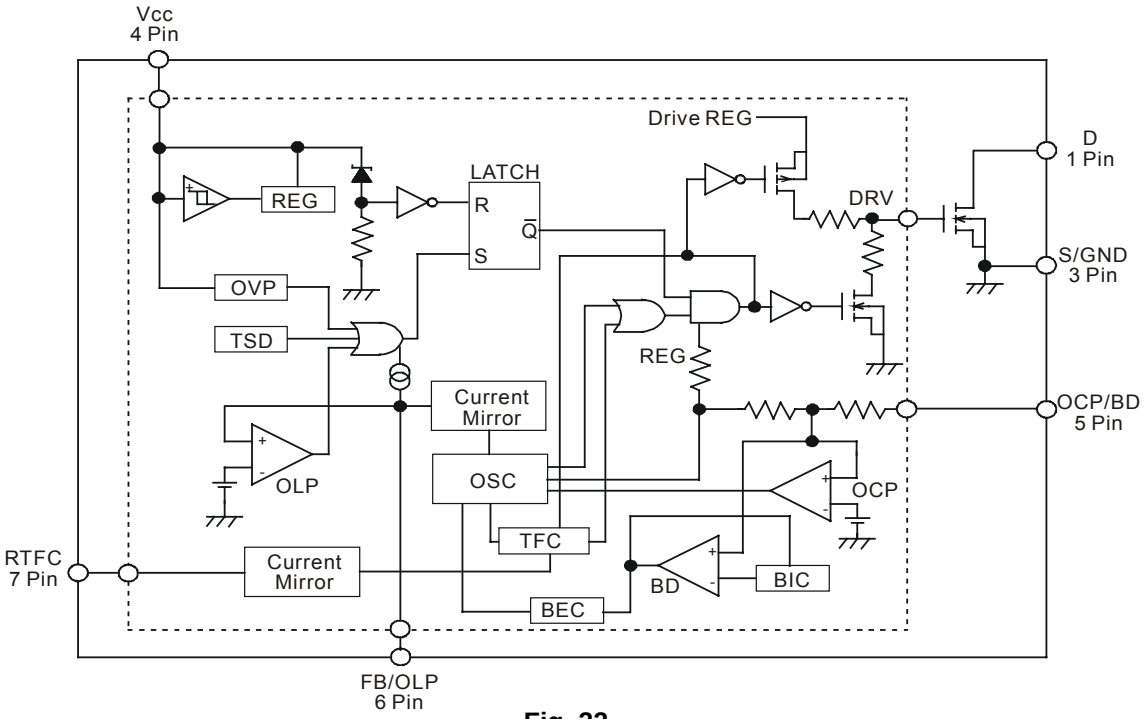

Fig. 22

(4) Pinning

Table 11

Pin No.	Symbol	Name	Function Description
1	D	Source for MOSFET	
2	NC		
3	S/GND	Source/GND for MOSFET	Source/ GND for Control
4	Vcc	Supply voltage	
5	OCP/BD	Over-current protection detection/Bottom detection	
6	FB/OLP	Feedback/Over-load protection detection	
7	RTFC	Time Fix Control regulation	

(5) Refer to Table 18 about Functions and Data of the IC's Pins.