EPITAXIAL-BASE NPN/PNP

POWER DARLINGTONS

The TIP120, TIP121 and TIP122 are silicon epitáxial-base NPN transistors in monolithic Darlington configuration in Jedec TO-220 plastic package, intended for use in power linear and switching applications.
The complementary PNP types are the TIP125, TIP126 and TIP127 respectively.

ABSOLUTE MAXIMUM RATINGS

		NPN PNP*	TIP120 TIP125	TIP121 TIP126	TIP122 TIP127
V_{CBO}	Collector-base voltage ($I_E = 0$)		60V	80V	100V
V_{CEO}	Collector-emitter voltage ($I_B = 0$)		60V	80V	100V
V_{EBO}	Emitter-base voltage ($I_C = 0$)			5V	
I_C	Collector current			5A	
I_{CM}	Collector peak current			8A	
I_B	Base current			0.1A	
P_{tot}	Total power dissipationa at $T_{case} \leqslant 25°C$			65W	
	$T_{amb} \leqslant 25°C$			2W	
T_{stg}	Storage temperature			-65 to 150°C	
T_j	Junction temperature			150°C	

* For PNP types voltage and current values are negative.

INTERNAL SCHEMATIC DIAGRAMS

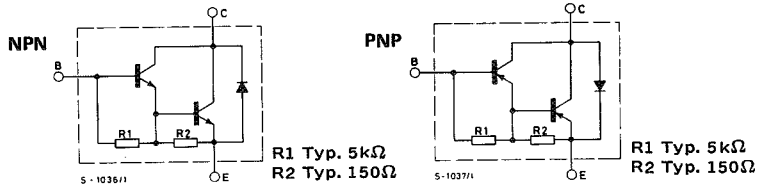

MECHANICAL DATA

Dimensions in mm

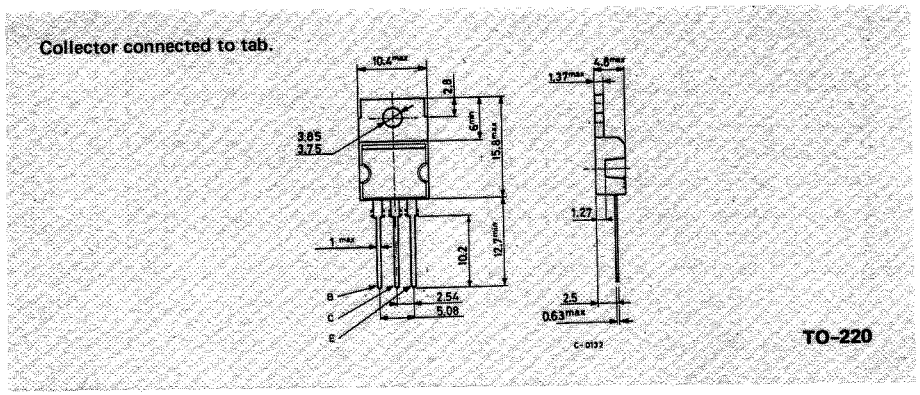

THERMAL DATA

$R_{th\ j\text{-}case}$	Thermal resistance junction-case	max	1.92	°C/W
$R_{th\ j\text{-}amb}$	Thermal resistance junction-ambient	max	62.5	°C/W

ELECTRICAL CHARACTERISTICS ($T_{case} = 25°C$ unless otherwise specified)

Parameter		Test conditions	Min.	Typ.	Max.	Unit
I_{CEO}	Collector cutoff current ($I_B = 0$)	for **TIP120/5** $V_{CE} = 30V$ for **TIP121/6** $V_{CE} = 40V$ for **TIP122/7** $V_{CE} = 50V$			0.5 0.5 0.5	mA mA mA
I_{CBO}	Collector cutoff current ($I_E = 0$)	for **TIP120/5** $V_{CB} = 60V$ for **TIP121/6** $V_{CB} = 80V$ for **TIP122/7** $V_{CB} = 100V$			0.2 0.2 0.2	mA mA mA
I_{EBO}	Emitter cutoff current ($I_C = 0$)	$V_{EB} = 5V$			2	mA
$V_{CEO\ (sus)}$*	Collector-emitter sustaining voltage ($I_B = 0$)	$I_C = 30mA$ for **TIP120/5** for **TIP121/6** for **TIP122/7**	 60 80 100			 V V V
$V_{CE\ (sat)}$*	Collector-emitter saturation voltage	$I_C = 3A$ $I_B = 12mA$ $I_C = 5A$ $I_B = 20mA$			2 4	V V
$V_{BE\ (on)}$*	Base-emitter voltage	$I_C = 3A$ $V_{CE} = 3V$			2.5	V
h_{FE}*	DC current gain	$I_C = 0.5A$ $V_{CE} = 3V$ $I_C = 3A$ $V_{CE} = 3V$	1000 1000			– –

* Pulsed: pulse duration = 300μs, duty cycle ⩽ 2%